Article

JHA

Journal for the History of Astronomy
2022, Vol. 53(4) 422–474
© The Author(s) 2022
Article reuse guidelines:
sagepub.com/journals-permissions
DOI: 10.1177/00218286221114093
journals.sagepub.com/home/jha
SAGE

Prediction and politics in Beijing, 1668: A Jesuit astronomer and his technical resources in a time of crisis

Christopher Cullen
Needham Research Institute, UK
Centre for the Study of China, Korea, and Japan UMR 8173 (CNRS – EHESS – Université Paris Cité), France

Catherine Jami
CNRS, Centre for the Study of China, Korea, and Japan UMR 8173, France

Abstract

In late December 1668 the Kangxi 康熙 emperor (r. 1662–1722) asked the Jesuit astronomer Ferdinand Verbiest (1623–1688) to give publicly verifiable proof that the western astronomical system introduced to China by the Jesuits was accurate. In response Verbiest proposed that he and his Chinese opponents should be set the task of predicting the length of the shadow cast by a gnomon of a given length at a given time on a given day, and his suggestion was accepted. Success in this experimental trial was vital to the future of the Jesuit mission in China. After repeating the trial at noon on three successive days, Verbiest was judged to have succeeded in showing the superiority of western methods in this respect. In this paper, we provide a detailed technical analysis of the methods used by Verbiest to make his predictions of gnomon shadows, and trace the sources of his skills back to his astronomical studies in Europe before his departure for China. In the course of this investigation, we discuss changes in European astronomical techniques up to the mid 17th century that played a decisive role in his predictive task. As a result of this analysis, we are able to explain certain previously puzzling features of Verbiest's predictions as a rational response on his part to the contentious circumstances under which the trial was conducted.

Corresponding author:
Christopher Cullen, Needham Research Institute, 8 Sylvester Road, Cambridge CB3 9AF, UK.
Email: cc433@cam.ac.uk

Keywords
Astronomical tables, astronomy in 17th C. China, astronomy in 17th C. Europe, Ferdinand Verbiest, Giambattista Riccioli, gnomonics, Jesuits, Sino-western scientific contacts, solar parallax

Introduction

In a previous publication we have given a detailed account of the political, cultural and religious context of certain events that took place in Beijing in the closing days of 1668 and early 1669, involving three Jesuit missionaries who had been under house arrest since 1665, and who were restored to imperial favour because of the success of one of their number in a test of astronomical skill.[1] The present study concentrates on certain technical aspects of that test which were not foregrounded in the previous discussion, but which turn out to be vital to understanding all the dimensions of the events described.

For the reader's convenience, a brief recapitulation of the main events discussed in the previous study may be useful. Jesuit missionaries had served the Manchu rulers of the Qing 清 dynasty as official astronomers since the dynasty seized control of Beijing in 1644. But in autumn 1664, the Jesuits at court were imprisoned as a result of a prosecution launched by a Chinese literatus opposed to the Jesuit presence in China, Yang Guangxian 楊光先 (1597–1669) . Initial sentences of death or banishment on those Jesuits principally concerned were commuted to house arrest in May 1665, while their missionary colleagues elsewhere in China were removed to Canton. Several Chinese Christian officials holding posts in the Astronomical Bureau, *Qin tian jian* 欽天監, were executed. By late 1668, the death of Johann Adam Schall von Bell (1592–1666, Tang Ruowang 湯若望 in Chinese), formerly Director of the Astronomical Bureau, left only three Jesuits in Beijing: Ferdinand Verbiest (1623–1688, Nan Huairen 南懷仁), formerly Schall's assistant and the sole member of the party skilled in astronomy, Lodovico Buglio (1606–1682, Li Leisi 利類思), the superior of the group, and Gabriel de Magalhães (1609–1677, An Wensi 安文思), who was skilled in handicrafts and left us a detailed account of what had recently taken place in a letter dated 2 January 1669, addressed to Jesuit colleagues in Macao.

In December 1668 the presence of the three remaining Jesuits in Beijing came to the notice of the young Kangxi 康熙 emperor (r. 1662–1722), who the year before had formally assumed personal rule. The Jesuits were summoned to the palace, and at the suggestion of Verbiest the emperor ordered them to demonstrate their astronomical ability by predicting the noon shadow cast by a gnomon of given height on a given date, in a trial which was repeated on three successive days (27, 28 and 29 December). Yang Guangxian, then Director of the Astronomical Bureau, and the Deputy Director Wu Mingxuan 吳明烜 initially claimed to be able to make such predictions, but when put to the test were forced to admit their inability to do so. As a result of Verbiest's acknowledged success in this trial, the Beijing Jesuits were released from confinement and the emperor and his advisors set Verbiest further tests. His success in these led to Yang and Wu being deprived of office in 1669, and to Verbiest's effective appointment to fill most of the functions in the Bureau once exercised by Schall.

The present article deals with a question that was not touched on in our previous study: by what means did Verbiest succeed in making the predictions demanded of him? The answer to this question turns out to involve not only technical aspects of astronomical calculation, but also the compromises made by Verbiest to fulfil his imperative need to be judged as a success by people whose understanding of what he was doing was at best limited.

In the first place, we shall ask why Verbiest chose gnomon shadow predictions as the preferred test of his system's validity. We then ask what exactly was it that he was attempting to predict, and what mathematical theory and tabulated data he needed to make his predictions. Next, we consider how Verbiest acquired the skills necessary to deal with such questions. We then look at a key element in understanding Verbiest's approach, his handling of the two corrections normally applied to the sun's theoretical altitude derived from astronomical tables in order to find the altitude as it will actually be measured by an observer in a particular position on the surface of the earth. We then attempt to reproduce the values of shadow length that Verbiest predicted for the three successive days of the trial. In making this attempt, we compare the results of three different methods of calculation that were available to Verbiest: first we use the method set out in the Chinese writings of the Jesuits themselves on astronomical calculation, next we use a method based on pre-calculated data in the ephemerides of Argoli, which we know to have been in Verbiest's possession at the time he made his predictions, and finally we use the techniques set out in the Rudolphine tables of Kepler. The full details of these calculations, summarised in the main text, follow the Conclusion in the Appendices.

Whatever the method of calculation used, the resulting shadow lengths depend on certain assumptions concerning the location of the observer, and the corrections to calculated values required in order obtain the apparent position of the sun as seen by that observer. On the basis of a set of assumptions consistent with Verbiest's explicit statements as well as with what is known of his astronomical studies, all three methods yield the noon shadow length given by Verbiest for the first day of the trial. However, none of the three methods, taken with the same assumptions, agree with the shadow lengths stated for the second and third days. Indeed, it becomes evident that no single method consistently applied could possibly reproduce all the predictions given by Verbiest for each of the three days of the trial. Finally, we suggest a possible reason for this apparent inconsistency, and examine its implications for our understanding of Verbiest's motives in making his predictions.

Choosing the gnomon test

It was the emperor who demanded from Verbiest an objective test that could be applied to the rival astronomical systems presented before his court. In the audience of 26 December 1668 he asked:

南懷仁曆法。合天與否。有何明顯的據

> What clear evidence is there that your astronomical system is or is not in conformity with the heavens?[2]

Verbiest answered that since antiquity it had been the universal practice to test the validity of an astronomical system by observation. And what is more, the ideal instrument for testing the accuracy of a system in predicting the seasons was the gnomon:

> 要考驗曆法合天與不合天。從古以來。皆以測驗為據。如要知曆上所定節氣之日時刻度分。合天與否。無過於勾股表影之法。請先定一表。不拘長短。令兩家預推。某日某時刻。表影有若干長短。尺寸分釐。臨期公同測驗其誰合誰差。衆目共見。不辨自明。

> In checking whether an astronomical system is or is not in conformity with the heavens, in all [cases] from antiquity onwards the proof has come from observation. If you wish to check whether the day, hour, and degree when the sun reaches a certain solar season according to an astronomical system is or is not in conformity with the heavens, there is nothing better than the method [that applies] right-angled triangles to gnomon shadows. I request that a gnomon be fixed – the length is immaterial – and that both parties be instructed to make predictions in advance, for a given day at a given time, of what the length of the gnomon shadow will be, in feet, inches and tenths and hundredths of an inch. We can then wait for the given instant, and then together determine who is accurate and who is in error. All eyes will see it: there need be no dispute since it will be self-evident.[3]

In response, the emperor commanded that the shadow of a gnomon at noon the next day, 27 December, should be predicted. Verbiest was certainly right in pointing out that as far back as systematic records of astronomical practice by imperial officials can be traced, the ultimate test of an astronomical system was whether or not its predictions were in accordance with observation.[4] His proposal of an observational evaluation of competing systems was therefore completely within accepted norms, and was in no way alien to time-honoured Chinese practice. In this respect there was no 'struggle over the rules of the game, the proper measurement of the truth of claims to knowledge': Verbiest was simply stating the normal practice in such matters.[5]

But why did Verbiest insist on the primacy of gnomon shadows as the preferred observational test, rather than, for instance, suggesting direct measurement of the angular altitude of the sun using a quadrant? The latter instrument had been the choice of Ptolemy of Alexandria, when in the second century CE he gave his views on the topic of solar observations in the *Almagest*, for many centuries the key text of the western astronomical tradition. There he carefully set out the mathematical procedure for calculating the length of noon gnomon shadows at the solstices and equinoxes from knowledge of the elevation of the north celestial pole above the horizon, and the 'arc between the solstices' (i.e. change in the declination of the sun from one solstice to the other, 2ε, where ε is the obliquity of the ecliptic), a procedure which can easily be extended to predict noon shadows for any other date for which sun's declination is known. He then points out that the procedure can be reversed, so that noon shadow measurements can yield the values of the quantities on which the previous procedure was based. However, he notes:

> . . . in so far as the accuracy of the observation is concerned, the former quantities [elevation of the pole and 2ε] can be exactly determined in the way we explained; but the ratios of the shadows in question to the gnomon cannot be determined with equal accuracy, since the moment of the equinox is, in itself, somewhat indeterminate, and the tip of the shadow at winter solstice is hard to discern.[6]

The instrument preferred by Ptolemy for determining the basic data referred above to was not the gnomon. Earlier in his text he explains:

> . . . our first task, as we said, is to determine the inclination of the ecliptic to the equator . . . This quantity can be determined directly by an instrumental method, using the following simple apparatus. [He then describes how to make a graduated meridian ring in bronze, and to use it for observing solar altitude] [. . .] We found an even handier way of making this kind of observation by constructing, instead of the rings, a plaque of stone or wood [. . .]. On this we drew a quadrant [. . .].[7]

In China, however, the status of the gnomon as the classic instrument for astronomical measurements was sanctioned by ancient authority, and even when instruments incorporating graduated rings had come into widespread use, the gnomon retained its place of honour. The primacy of the gnomon was established by the reference to its use in the *Zhou li* 周禮 'Ritual of the Zhou [dynasty]' supposedly composed by Dan 旦, Duke of Zhou, a revered figure in the foundation of the dynasty c. 1046 BCE, who was seen by Confucians as embodying the qualities of an ideal minister and subject. There we read:

> 日至之景尺有五寸謂之地中。
>
> When the [summer] solstice shadow [of an 8 *chi* high gnomon] is 1 *chi* 5 *cun* [1.5 *chi*], that [place] is called the middle of the land.[8]

The enduring status of the gnomon as the foundational astronomical instrument more than two millennia after the traditional date of the *Zhou li* is clear from the beginning of a 13th century Yuan dynasty discussion of the *Shou shi li* 授時曆 'Season Granting [astronomical] system', the culminating point of the indigenous Chinese astronomical tradition:

> 天道運行，如環無端，治曆者必就陰消陽息之際，以為立法之始。陰陽消息之機，何從而見之? 惟候其日晷進退，則其機將無所遁。候之之法，不過植表測景，以究其氣至之始。
>
> Heaven moves round in an endless cycle. Those who handle astronomical systems need to grasp the ebb and flow of Yin and Yang, in order to lay down the starting point of their methods. How can one observe the mechanism of how Yin and Yang ebb and flow? That is done by observing the advance and retreat of the solar shadow, so that nothing about the mechanism is hidden. The method of observation is none other than setting up a gnomon and measuring its shadow, so as to search out the starting point for the arrival of *qi*.[9]

The text continues by noting, as had Ptolemy, the difficulty of measuring shadow lengths precisely, but goes on to discuss the methods adopted by Yuan astronomers for dealing with that problem – including making the gnomon five times higher than the standard 8 *chi* length,[10] and adopting a pinhole device for giving a sharp image of the top of the gnomon on the measuring scale.[11] Finally, it gives a series of examples of how the precise moments of solstices can be determined using interpolation between noon shadow measurements.[12]

There were, then, excellent reasons for choosing gnomon shadows as the scene of competition in the context of astronomy in China. Added to that, there was another strong reason for Verbiest's choice – which was, as we shall shortly see, that although his opponents initially expressed complete confidence in their ability to handle a challenge on such a central astronomical issue as gnomon shadows when it was first put to them in audience with the emperor, Verbiest knew that it was unlikely that they actually possessed the technical means needed to meet the challenge in the precise form that the emperor had accepted. Further, the knowledge of relevant advances in astronomical techniques that he is likely to have gained during his studies in Europe before his departure for China in 1657 may have added to his confidence in his own ability to make successful predictions.[13]

The dimensions of the problem

The different heights of the gnomons used on the 3 days of the trial, and the corresponding predictions of noon shadow lengths made by Verbiest are recorded in two printed texts by him. One was composed in Chinese not long after the events in question: this is *Qin ding xin li ce yan ji lue* 欽定新曆測驗紀略 (A summary of observations in accordance with the new astronomical system, imperially commissioned).[14] The other was written in Latin for a western audience 18 years later: this is *Astronomia Europaea . . . ex umbra in lucem revocata . . .* ('European astronomy . . . called back to light from darkness . . .'.[15] The same figures are given in the official report submitted on the final day of the trial (29 December 1668) by the officials appointed by the emperor to supervise it, to be found in the collection of memorials, assembled under the title *Xi chao ding an* 熙朝定案 (Cases decided during the [Kang]xi reign).[16] The gnomon heights and noon shadow lengths are summarised in Table 1.

Table 1. Verbiest's shadow predictions.

Date, 1668	Gnomon height, *chi*	Verbiest's noon shadows, *chi*
December 27	8.49	16.66[17]
December 28	2.2	4.345
December 29	8.055	15.83

The length unit *chi* 尺 used here, often rendered in English as 'foot' (see above), was close to 32 centimetres in Ming and Qing times. In the original Chinese texts, the subdivisions of the *chi* are expressed in decimal fractions – tenths as *cun* 寸 (inches), hundredths as *fen* 分 and thousandths as *li* 釐, this last unit being equivalent to 0.32 mm, a length difficult to perceive on a graduated ruler, and certainly not capable of being distinguished on a gnomon shadow over 5 m long (16 *chi* = 512 cm), which fades into

the penumbra over several centimetres without any sharp and obvious boundary marking its end point.

In his writings for a European readership, Verbiest claims that these predictions were acknowledged by all present to be a complete success. Previous authors have sometimes asked whether Verbiest's predictions were, in fact, really correct. The best-known discussion in those terms is found in an article by Pingyi Chu, which makes use of calculations by Huang Yi-long.[18] Huang does not explain exactly how his calculations of shadow lengths were performed, apart from telling us that they were calculated in accordance with 'modern astronomical knowledge' *xiandai tianwen zhishi* 現代天文知識. However, as can be seen from Table 2, the apparent noon solar altitudes implied by Huang's shadow lengths are very close (within 0.01°) to the values of the apparent noon solar altitude of the centre of the sun yielded by the NASA *Horizons* online ephemeris programme, at the location of the Beijing Ancient Observatory, with allowance for atmospheric refraction.[19] It seems clear, therefore, that Huang's shadow lengths were derived from a calculation of the altitude of the solar centre for the days in question, however performed.

Table 2. Verbiest's shadow lengths and Huang Yi-long's calculations.

December 1668	Gnomon height, *chi*	Verbiest's predicted shadow length, *chi*	Huang Yi-long's calculated shadow length, *chi*	Altitude of light source implied by Huang's shadow length, degrees	Altitude of the centre of the sun at local noon Beijing, NASA Horizons ephemeris (refracted), degrees
27	8.49	16.66	16.807	26.800	26.793
28	2.2	4.345	4.345	26.854	26.846
29	8.055	15.83	15.868	26.914	26.906

Huang notes that the discrepancy between his predictions and those of Verbiest is particularly large for the first day, and speculates that there may be an error in Verbiest's Chinese text, which, he suggests, should be corrected to 16.86 *chi* for the first day. This would however, make the shadow length inconsistent with the length given in Verbiest's later Latin writings, as well as in the official report: see note 17. In fact, we shall see below, the real problem with Huang's approach is that the lengths of the shadows predicted by Verbiest were those of the umbra, the densest part of the shadow, cast by the sun's upper limb, not by its centre.

But a more serious problem with the approach of Huang, followed by Chu, is that the question of what 'correct' means in this context is not raised, and, as we shall see, that is a crucial issue in making sense of Verbiest's shadow predictions and the reaction to them. To clarify this issue, we shall try to answer the following questions:

(a) What was it that Verbiest was actually attempting to predict on each day of the trial?
(b) How did he carry out those predictions?
(c) What did those present at the times of observation think he should have been predicting?

Before we begin our analysis, it is important to note that calculating gnomon shadows in this way was an unusual procedure in China. Astronomers in East Asia had long made use of daily series of observational measurements of the lengths of noon gnomon shadows to deduce the precise moments of solar events crucial to the initial conditions of astronomical systems, such as solstices. As mentioned above, there are a number of examples of this in the Yuan dynasty *Shou shi li* 授時曆 'Season granting astronomical system', on which was based the Ming dynasty *Da tong li* 大統曆 'Great concordance astronomical system', restored to use by the Jesuits' opponents. But the reverse procedure, predicting the noon length of a gnomon shadow on the basis of the position of the sun in its annual cycle on the day in question, was not part of normal practice.

It was probably their knowledge of the way that shadow observations had been used in the past that led Yang Guangxian and Wu Mingxuan to excuse their ignorance of how to predict the shadow of a gnomon at noon on a given day in the following terms:

> 這箇我們不曉得。不能預先推定。但能看日影已到之處已後方知推算。
>
> This is something beyond our understanding. We cannot make advance predictions. All we can do is to make calculations after we have seen where the shadow reaches to.[20]

But Verbiest was taking things in the reverse order: he did not set out to use shadow observations to deduce the instant when a particular astronomical event had taken place, but instead began from a given time on a given date, and on that basis he undertook to predict how long the shadow then cast by a given gnomon would be. In order to make such predictions, Verbiest needed three things:

(a) Tables and procedures enabling him to find the position of the sun on the celestial sphere in angular coordinates at any desired instant.
(b) Knowledge of the angular altitude of the north celestial pole above the horizon at the point of observation (equivalent to the observer's latitude), so that the orientation of the celestial sphere relative to that horizon was known, and hence the position of the sun relative to that horizon (specifically its noon altitude and zenith distance) could be determined.
(c) Trigonometric tables enabling the sun's noon altitude above the horizon to be used to determine the shadow cast by a gnomon of known height.

The Season Granting system and its near twin the Great Concordance system both provided tables, and specified procedures for their use, adequate for (a),[21] and as for (b) the altitude of the pole had been systematically measured at 26 different locations in the Yuan empire in 1279 as part of the preparation of the Season Granting system.[22] In order to make the most precise predictions there were, as we shall see, certain corrections that needed to be applied to the results obtained for the sun's altitude and zenith distance, but the major element possessed by Verbiest but not by his opponents was (c), trigonometrical tables. The Jesuits had introduced such tables into China early in the 17th century. A full set of tables in 6 *juan* formed part of the books presented to the throne on Chongzhen 4/1/28,[23] 28 February 1631, and is now found in the *Chong zhen li shu* 崇禎曆書

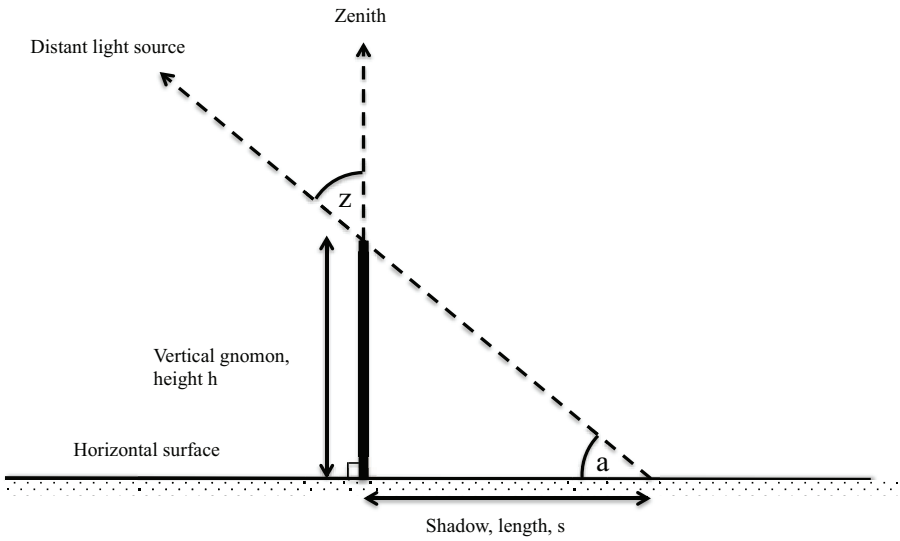

Figure 1. Gnomon, angles and shadow length.

'Writings on mathematical astronomy [compiled] during the Chongzhen reign [of the Ming dynasty, i.e. 1628–1644'] with whose use Verbiest would have been familiar, although he knew it under the modified title *Xi yang xin fa li shu* 西洋新法曆書 'Writings on mathematical astronomy [in accordance with] the new methods' which it was given by Schall at the start of Qing rule in Beijing in 1644.[24]

To illustrate the crucial role of trigonometry in Verbiest's task, consider Figure 1.

Here a distant small bright light source, assumed to be far enough away so that it can be treated as being effectively a point, will cause the vertical gnomon of height h to cast a sharp edged shadow, length s, on the horizontal surface. The angle a is the altitude of the light source above the horizon, and angle z is its 'zenith distance'. From the diagram, we see that since the gnomon is at right angles to the horizontal,

$$z + a = 90°; \text{ z and a are thus complementary angles.}$$

Since by definition of the tangent function tan (a)=h/s and tan (z)=s/h, we may write:

$$s = h / \tan(a) \text{ and } s = h . \tan(z),$$

depending on which is more convenient. Thus if we know the height of the gnomon and either the altitude or the zenith distance, we can predict the length of the shadow that will be cast – but only if we have a table of tangents or its equivalent. Using the Great Concordance system, it would be possible to predict what a or z would be at noon on a given day at Beijing if the light source is the sun, but without a tangent table there would be no means of finding s by calculation.

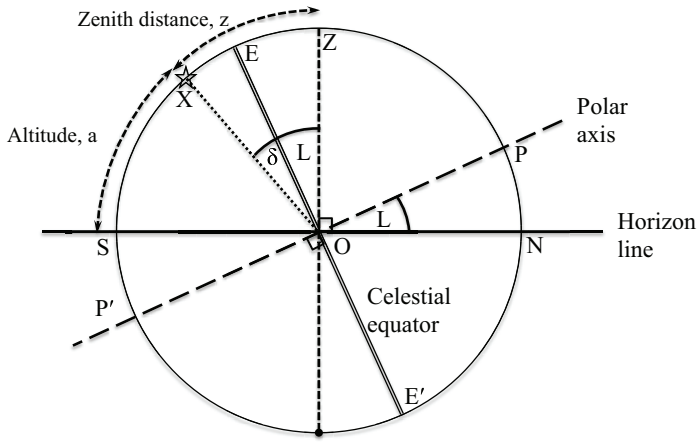

Figure 2. Celestial sphere, latitude, declination, zenith distance and altitude.

To see how the noon altitude or zenith distance of a given celestial body may be found from more basic data obtainable from tables, consider Figure 2, which shows a vertical section through the celestial sphere along the meridian of a terrestrial observer.

The observer is at O, the centre of the sphere whose diameter is taken to be effectively infinite. N and S are the north and south points on the observer's horizon, and Z is the zenith point of the sphere, vertically above the observer. P and P′ are the north and south celestial poles, through which runs the polar axis about which the celestial sphere appears to rotate in the course of a day and a night. The elevation of the north celestial pole above the horizon, L, is equal to the observer's latitude. The line EE′ is a side view of the celestial equator, whose plane is perpendicular to PP′. The star X is currently on the north-south plane through the observer's position which intersects the celestial sphere in the arc SXEZN, the observer's meridian (or at least the part of it visible above the horizon). The angular distance of the star from the equator along the meridian is its declination, δ (delta).

Since OZ is perpendicular to SN, the angle between the plane of the celestial equator and the vertical is equal to L, and the zenith distance of the star will be:

$$z = L + \delta$$

and the altitude will be:

$$a = 90° - (L + \delta).$$

For a given observer, L is a fixed quantity dependent on their location. A star's declination changes only very slowly in the course of centuries, due to the phenomenon of precession, and thus stars cross the meridian at the same altitude from one day to the next. The sun, moon and planets are however in constant motion on the celestial sphere, and

thus astronomers in the pre-computer age would normally need to find the declination of the object of interest on a given day at a given time by consulting appropriate tables.

For a naked-eye terrestrial observer, a star is effectively a point source of light, which would cast a sharp-edged shadow, assuming that the star was bright enough for the shadow to be perceptible. If however we are dealing with the sun, the shadow is cast by light from an extended body appearing as a bright disk on the celestial sphere, of diameter about 30 minutes of arc. The visible shadow will therefore be composed of an infinite number of superposed shadows, each cast by a different point on the sun's disk and hence differing slightly from one another in length and direction. As a result, the shadow will have fuzzy edges, but more importantly will not end sharply at some given length, but instead will fade away gradually, so it is difficult to decide exactly where it ends, and thus to define its length.

To avoid this uncertainty, the normal practice in 17th century Europe was therefore to define the *umbra recta* (Latin 'direct shadow'), as the darkest part of the shadow of a vertical gnomon on horizontal ground, whose end effectively marks the full length of the shadow cast by the upper edge of the sun, its 'upper limb'.[25] The fainter shadow beyond the end of the *umbra recta*, fading to become imperceptible with increasing distance from the gnomon is the *penumbra* (Latin 'nearly shadow'). Thus if we wish to predict the length of the *umbra recta* from the declination of the sun found in tables for a given noon (which refers to the centre of the sun's disk), then if the sun's diameter is taken to be 30 minutes of arc we must subtract 15 minutes from the tabulated declination if the sun is south of the equator (as in winter) or add 15 minutes if the sun is north of the equator (as in summer). The rationale of this adjustment was made plain in the diagram below, which comes from a part of the *Chong zhen li shu* collection submitted to the throne in its final form on Chongzhen 4/8/1, 27 August 1631 under the title *Ce liang quan yi* 測量全義 'A complete account of observational measurement methods'. The Jesuit missionary Giacomo Rho (1593–1638) contributed his mathematical expertise to the compilation of this text (Figure 3).[26]

The roman letters in the diagram have been added for ease of reference. As the accompanying text explains, the shadow of the vertical gnomon UV cast by the upper limb of the sun Z is VF, termed *zhi ying* 直景 'direct shadow', that is, *umbra recta*. Thus, if the zenith distance of the centre of the sun, X, is known we must subtract the sun's semidiameter to find the zenith distance of the upper limb, from which the umbral shadow may be derived, and vice versa. Making shadow measurements in ignorance of this correction, the text points out, means that many pre-modern determinations of solar zenith distance and altitude must have been in error.[27]

But there are two further corrections that enter into the relationship between calculated values of the zenith distance or altitude of the solar centre, and the lengths of shadows actually observed. These corrections relate to two effects, refraction and parallax, the first representing the effect of the sun's rays bending slightly on entering the atmosphere so that the altitude of the sun appears slightly greater than it would have done in the absence of an atmosphere, and the second resulting from the fact that an observer on the surface of the earth is not at the point for which astronomical tables are calculated (the centre of the earth), thus slightly changing the direction of the line from the observer to the sun, so as to decrease the observed altitude from the predicted value.

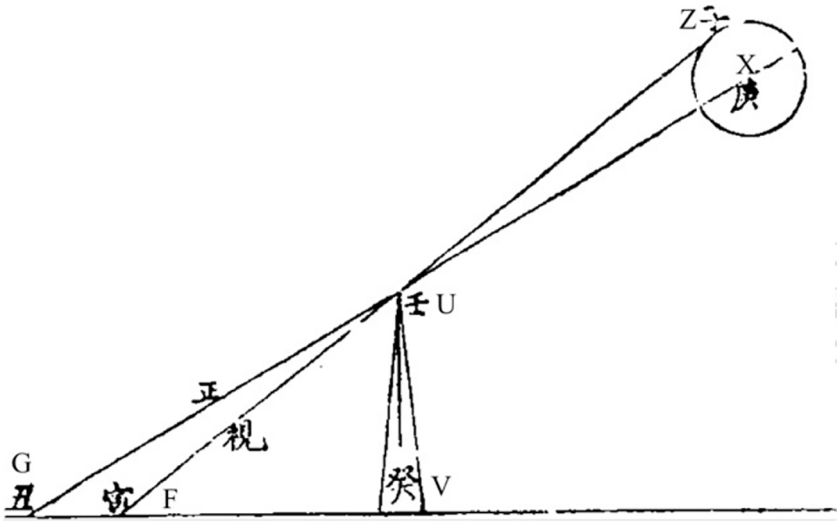

Figure 3. Finding the *umbra recta*, the shadow cast by the sun's upper limb. From *Ce liang quan yi* 10, 16a. See Cullen and Jami, *op. cit.* (Note 1) p. 48 n. 115.

To understand Verbiest's application of these corrections, we shall need to consider the background of his astronomical studies in 17th century Europe.

A Jesuit astronomer and his education: Verbiest's sources

The densely referenced research of Noël Golvers relating to Ferdinand Verbiest is invaluable as a source of evidence for how and where Verbiest studied astronomy before his voyage to China; in this section we shall refer to Golvers' work repeatedly.

Some of Verbiest's training in this field is likely to have taken place during his apprenticeship as Schall's assistant in Beijing from 1660, but it is also important to investigate what he is likely to have learned as a Jesuit student and teacher before his departure for China in 1658. Whatever he had learned by then was sufficiently impressive to have led both Schall and his Beijing colleague de Magalhães to look forward to his arrival in China as someone already 'well versed in the science of mathematics' (*wel ervaren in de Wetenschap van de Mathesis*) and 'especially well trained in mathematics' (*praecipue Mathematices instructus*).[28]

Some elementary knowledge of basic astronomy was part of the Jesuit curriculum in philosophy, and indeed Verbiest himself tells us that his two colleagues in Beijing, Buglio and de Magalhães 'had absorbed some principles of the two spheres [terrestrial and celestial] from their philosophical studies' (*fundamenta quaedam utriusque sphaerae ex Philosophia haussisent*).[29] There was no however no more advanced course available in any Jesuit institution in Europe where Verbiest might have acquired the training he needed. Indeed, his colleague in the novitiate and later in China, Francois de Rougemont, wrote in a letter in 1661 that Verbiest's expertise was all the more admirable because it

was *privato fere studio acquisitam* 'gained mostly by private study'.[30] As to when the 'private study' (which expression did not exclude individual work with a teacher, as opposed to attending a formal course of lectures) may have taken place, likely periods are his year in the *Collegio Romano* in 1652–53, when he met Athanasius Kircher, with whom he later maintained a correspondence, his further visit to Rome and Genoa in 1655, and his time teaching mathematics at Coimbra from 1656–57, a period when he said he 'learned more than he taught'. Finally, there was the long voyage to China with his fellow Jesuit Martino Martini (formerly a student of Kircher in mathematics), who he tells us gave instruction in astronomy to the young missionary passengers.[31]

It is also possible to identify one highly probable textual source for at least some of the astronomical knowledge gained by Verbiest before he came to China. Giambattista Riccioli (1598–1671) was born a quarter of a century before Verbiest, and joined the Society of Jesus at the age of 16.[32] His major substantive post was as a professor of theology at the University of Bologna, but it was astronomy that drew him as a researcher, writer and teacher, and he was eventually allowed to devote himself to it full time. His first major work on this topic, with the ambitious title *Almagestum Novum* 'The new Almagest'),[33] hereafter abbreviated as *AN*, was published in 1651, 6 years before Verbiest left for China in 1657. In his preface, Riccioli explains that he is writing in the hope of providing 'for the men of our Society, and others' a single compendious work from which they may learn everything about ancient and modern astronomy, including the relevant controversies that have taken place.

A modern reader consulting Riccioli's book may well feel that he succeeded in writing the book he intended to write. His writing is clear, detailed and gives full 'state of the field' reviews of all the topics he discusses, so that the reader is not only well informed of Riccioli's views and his reasons for holding them, but is also told what all previous writers on the topics treated have said, from antiquity up to Riccioli's day. In addition, he informs us of what he has learned from an extensive correspondence with contemporary astronomers throughout Europe. He gives frequent examples of the observations and calculations, by himself and others, on which his work is based, with detailed explanations designed to facilitate the work of students. To make his very substantial writings more accessible, he adds comprehensive and well-structured indexes and lists of tables at the end of his book. Riccioli has mostly been discussed by recent historians in relation to his opposition to heliocentrism, but his contemporaries valued his work as an indispensable and comprehensive technical and historical reference, irrespective of their religious allegiance. Thus the English astronomer John Flamsteed (1646–1719), appointed as the first Astronomer Royal in 1675 and by no means a geocentrist, appears to have 'frequently consulted' Riccioli's book in the preparation of the Gresham lectures he delivered in London in 1681–84.[34]

As a student (and later teacher) of mathematics and astronomy during this period, it is hard to believe that Verbiest would not have studied – even acquired – this comprehensive, up to date and reader-friendly book by a fellow Jesuit before leaving for China. This likelihood is greatly strengthened by the fact that Riccioli sent a copy of his recently published *Almagestum Novum* to Kircher in February 1652, early in the year during which Verbiest was in Rome and is known to have been in contact with Kircher, with whom he later maintained a correspondence.[35] There is clear evidence from Verbiest's

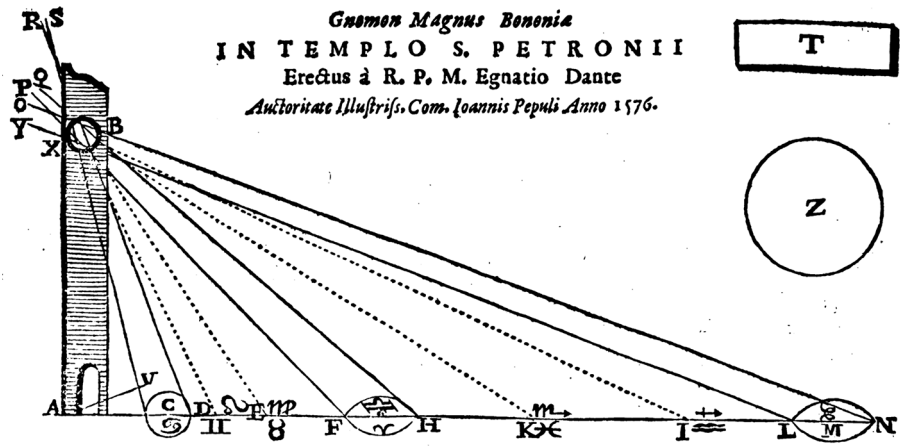

Figure 4. Danti's gnomon in the church of San Pietro, Bologna: see *Almagestum Novum* Book 3, p. 132 (Source gallica.bnf.fr/Bibliothèque nationale de France). The caption records its construction in 1576 under the patronage of the Senator Giovanni Pepuli. The rectangle T and the circle Z represent respectively (not to scale) the iron plate set into the roof structure, and the circular hole in it through which the sun's light passes. The three images of the sun drawn on the horizontal scale represent what is seen (from left to right) at summer solstice noon, at equinoctial noon and winter solstice noon.

later writing that he knew of Riccioli's works, and was highly appreciative of their value[36]; the catalogue of the Jesuits' library in Beijing lists no less than four copies of the *Almagestum Novum*.[37]

By what one can only describe as a highly fortuitous coincidence, Riccioli wrote his book in Bologna, the one place in 17th century Europe where there was a well established tradition of interest in gnomon observations of the sun – and using gnomons twice as high as any constructed in China. The gnomon of Bologna did not take the form of a vertical pole, as in the Chinese tradition, nor of a horizontal bar mounted in a stone tower like the 10 m high Yuan dynasty gnomon mentioned above. Instead, the first version of the Bologna gnomon, set up by Egnazio Danti in 1576,[38] consisted of a hole pierced in the wall of a side chapel of the great university church of San Pietro, at a height of 65 feet of Bologna and 9.25 inches, equivalent to 25 m.[39] The sun's light passing through this aperture fell on a meridian line marked on the floor of the church, and the Italian name of the line '*meridiana'* was used to refer to the overall arrangement. Riccioli includes an illustration of the *meridiana* in his book (see Figure 4).

Danti's gnomon was useful, but somewhat imperfect; its meridian line was forced by the layout of the church pillars to deviate from north-south alignment by 9°, and it was not precisely level. In 1655–56, Giovanni Domenico Cassini oversaw the construction in San Pietro's of a new *meridiana* that eliminated these problems.[40] But this further part of the gnomon's story need not concern us here, although we shall have occasion to refer to Cassini's work in Bologna a little later.

Given Riccioli's familarity with gnomon observations, it is not surprising that we find in *Almagestum Novum* a discussion of how the true altitude of the sun may be deduced from a gnomon shadow measurement in, by calculating the tangent of the apparent altitude from the height of the gnomon divided by the shadow length, and applying certain corrections to the angle thus found. Riccioli's words are:

> Si Solis Altitudinem Meridianam, per umbram Gnomonis meridianam observare volueris, oportebit notam esse altitudinem styli & longitudinem umbrae meridianae [. . .] deinde per Trigonometriam inquirendus est in triangulo rectilineo rectangulo, angulus oppositus Gnomoni [. . .] qui angulus erit altitudo visa superioris Solis limbi, a qua si detraxeris semidiametrum Solis apparentem, relinquetur altitudo Solis, id est centri eius, apparens; quae correcta additione Parallaxeos, detractione Refractionis, dabit altitude[inem] veram Solis [. . .].
>
> If you wish to observe the altitude of the sun by the noon shadow of a gnomon, you must note the height of the pillar [i.e. the gnomon] and the length of the noon shadow [. . .]. Next you use trigonometry to find the angle opposite the gnomon in the rectilinear right-angled triangle [. . .], which angle will be the apparent altitude of the upper limb of the sun, and if you subtract the apparent semidiameter of the sun [from the apparent altitude], that will leave the altitude of the sun, that is, of its centre; which, if corrected by the addition of the parallax and the subtraction of the refraction, will give the true altitude of the sun.[41]

Given this explanation, it would have been simple for Verbiest to reverse the procedure, and calculate what length of shadow would result from using a given gnomon at a time when the altitude of the sun was known from tables. Thus, if Verbiest could use tables to calculate the true noon altitude of the sun's centre on a given day, he could then apply the two corrections in reverse (subtracting parallax and adding refraction), add the semidiameter of the sun, and so find a value for the apparent altitude of the upper limb at noon on the given day. From this, using the equation given above

$$s = h / \tan(a)$$

he could find the length of the *umbra recta* shadow s from the gnomon height h and the altitude just found. There is an example of this calculation in Verbiest's account of the new instruments he constructed for the imperial observatory after he took office in 1669. He tells us that after having determined by a quadrant that the noon altitude of the sun was 33;42°, and by a sextant that the zenith distance was 56;18°, [42] it was found that the shadow cast by a gnomon 8.5 *chi* high was 13.745 *chi* long.[43] The shadow length is clearly a misprint for 12.745 *chi*, since:

$$8.5\ chi \times \tan\left(56;18°\right) = 12.745\ chi$$

Since the quantities discussed in this example all related to the apparent sun, the question of corrections did not arise. But later in the same work, in discussion of observations made using a quadrant, Verbiest stresses the necessity of taking both factors mentioned by Riccioli, parallax and refraction, into account if underlying true values of celestial coordinates were to be deduced from apparent values.[44]

The two corrections: What were they, and what were their values?

But what exactly were the refraction and parallax corrections specified by Riccioli? As already indicated, refraction is the physical effect operating on rays of light that enter the atmosphere at an angle to the vertical, as a result of which they change direction slightly towards the vertical, resulting in the celestial body that is the source of the light having an apparent altitude slightly greater than what would have been observed from the earth's surface in the absence of an atmosphere. Parallax is the difference between the altitude of a celestial body (in this case the sun) as seen by an observer at the centre of the earth (which is the position for which tables of solar motions are calculated) and by an observer who is 'off-centre' somewhere on the earth's surface, assumed for this purpose to be devoid of atmosphere. The result of parallax is to decrease the altitude of the celestial body slightly relative to what would have been seen from the centre of the earth. Parallax is thus in principle a quantity that can be calculated by trigonometry, given relative values for the radius of the earth and the distance of the sun from the earth; changing estimates of the dimensions of the solar system therefore necessarily implied changes in predicted values of parallax.[45] Refraction, on the other hand, had to be estimated in part at least empirically until the discovery and publication of a quantitative law of refraction by various authors during the first half of the 17th century. Both of these effects fall to zero when the object is seen at the zenith (90° altitude), and are at their maximum when it is seen on the horizon.

Refraction and parallax had been recognised in Europe since antiquity,[46] although they do not appear to have been discussed in China before the arrival of the Jesuits. In 1543 Copernicus discussed parallax in the context of his new cosmography, and gave a table of expected values for the parallaxes of sun and moon at all altitudes, using the parameters of his own system.[47] The first modern systematic consideration of parallax together with refraction was attempted by Tycho; however various factors including his under-estimate of the sun's distance relative to the size of the earth, led him to greatly overestimate the magnitude of the necessary correction for parallax. In order to produce consistency with his own highly accurate observations, this error involved Tycho in having to assume that rays of light from the sun, the moon and the stars were refracted by slightly different angles, so that the refraction applied to observations of these bodies had to be tabulated separately.[48] It is, however, Tycho's tables of refraction and parallax for the sun that are tabulated in the *Chong zhen li shu*, and reproduced in the version that became the *Xin fa li shu*.[49]

The *Chong zhen li shu* explains how the parallax of the sun can be calculated, using a diagram of which the image in Figure 5 is a modernised version, with some quantities marked explicitly that are only referred to in the explanatory text of the original.[50]

The observer is at D on the surface of the earth (of which only a quadrant is shown), whose semidiameter is r. Her local zenith is at A. The angle z (angle ADB) is the apparent zenith distance of the sun, whose altitude above her horizon will therefore be 90°–z. If however the observer was to use astronomical tables to find the zenith distance of the sun at her moment of observation, what she would find would not be z, but z′ (ACB), the zenith distance that would have been seen by an observer at the centre of the earth, C. The difference between the two angles is the sun's parallax, p (angle DBC).

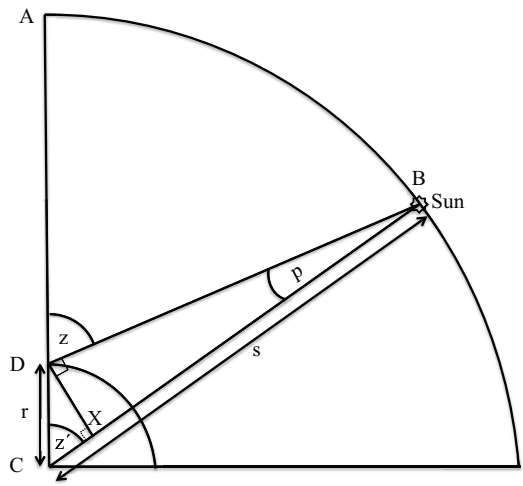

Figure 5. Calculating parallax.

The diagram in Figure 5 shows the distance of the sun, s, as only about 5r. But no serious astronomer since antiquity has ever believed the s was any less than 1000r. If s = 1000r, the earth would be almost invisible on the diagram, and angle p would be no more than a few minutes at most, so we can make some approximations in our calculations with very little loss of accuracy.

Thus, if we begin by constructing DX at right angles to DB, then the angle CDX will be the altitude, 90°–z. Because p is so small, we may also take DX as being perpendicular to CB, so that the angle z′ is very nearly equal to z. DX can thus be found from:

$$DX = r \sin(z)$$

Also, since XC is much smaller than s, we may take BX = s, and thus in the triangle XDB:

$$p = \arcsin(DX/s) = \arcsin((r/s).\sin(z))$$

Using this expression, then given the ratio r/s we may calculate the parallax p for any apparent zenith distance, and thus for any apparent altitude. To obtain the true zenith distance from the apparent zenith distance we subtract the parallax, and to find the true altitude from the apparent altitude we add the parallax.

The maximum value of the parallax p will be seen when z = 90°, so that the sun is on the observer's horizon. Then sin (z) = 1, so that:

$$p = \arcsin(r/s)$$

This maximum value is called the 'horizontal parallax'.

The explanatory text in *Chong zhen li shu* and *Xin fa li shu* makes only one reference to r/s, when it notes that Copernicus (Ge Baini 歌白泥) took it to be 1/1142.[51] Significantly Tycho also cites Copernicus as giving the 1142 value for s in his explanation of how parallax may be found, on which the Chinese text is no doubt based. Tycho's own chosen value took (r/s) = 1/1182 at apogee,[52] so that the maximum value of p, the sun's 'horizontal parallax' when z = 90° at apogee will be:

$$p = \arcsin (1/1182) = 0;02,54°$$

This is indeed the maximum tabulated apogee value for parallax in Tycho's table, translated in *Xin fa li shu*. The maximum values for parallax at mean distance and perigee, together with the other values in his table, follow similarly.

If, however, Verbiest had studied those parts of Riccioli's book that dealt with such questions, he would have soon realised that Tycho's parallax values were widely regarded as obsolete by the time he began to study astronomy. The key point was that Tycho's estimates of the distance of the sun were, by the middle of the 17th century, beginning to be seen as much too small, implying that his predicted values of parallax were too large. One of Riccioli's major contributions to astronomy was his careful use of the telescope to find the distance of the moon by the process known as 'lunar dichotomy', by which one observed the moment when the edge of the 'terminator' ran in an apparent straight line from north to south in the observer's field of view, giving an exact half-moon. At that moment, the line from the terrestrial observer to the moon was perpendicular to the line from the moon to the sun. This enabled him to estimate the ratio of the distance from the moon to the sun as a multiple of the distance from the earth to the moon; in turn, using an estimate of the earth-moon distance he went on to deduce that the ratio of the earth's semidiameter to the distance of the sun at apogee was more like 1/7580 than Tycho's 1/1182, leading to a value for maximum solar horizontal parallax of only 0;00,30° rather than Tycho's 0;02,54°.[53] As Riccioli noted, this change not only involved the scale of the solar system, but also had implications for basic astronomical constants such as the obliquity of the ecliptic. Thus, he pointed out, an observation of the altitude of the sun made by him at Bologna in June 1646 would have implied an obliquity of the ecliptic equal to 23;31,02° using Tycho's parallax, but yielded a value of 23;30,00° using his own new parallax.[54] Although Riccioli's horizontal parallax was several times smaller than Tycho's, it was however still large enough compared to the true value to force him, like Tycho, to give different tables for the refraction to be used for the sun, the moon and the fixed stars, in order to be consistent with observational results.[55]

Riccioli was not alone in seeking to expand the dimensions of the solar system. He noted that Gottfried Wendelin (1580–1667), with whom he was in correspondence, had proposed distances of the sun double his own, which would have reduced the horizontal parallax of the sun to about 0;00,14°. Both Riccioli's and Wendelin's parallaxes were more realistic estimates than Tycho, but modern values of r = 6358 km (measured through the poles) and a mean distance for the sun of s = 149,597,900 km give a ratio of 1/23,440, leading to an even smaller horizontal parallax of 0;00,09°.[56]

By the second half of the 17th century, when Verbiest studied and practised astronomy, it was clear that the old schemes of sizes and distances in the solar system were no longer to be trusted.[57] A striking instance of scepticism may be see in the early work of the Italian

astronomer Giovanni Domenico Cassini (1625–1712), known as Jean-Dominique Cassini after his later move to Paris. In 1650, at the age of 25, he was appointed to the chair of astronomy at the University of Bologna. As we noted earlier, it was Cassini who replaced Danti's *meridiana* with a new and much improved construction in 1665–56. Using this and other instruments, Cassini became convinced that the sun's parallax was much smaller than had been suspected. In an outline of some of his early experiments published in 1656, one of the sections was headed *Parallaxis solis paene insensibilis* 'The parallax of the sun [is] nearly imperceptible'.[58]

In it he refers to an observation he made on 4 April 1653, when he had observed a 'dichotomy' of the moon at its first quarter (implying that the angle earth-moon-sun was 90°) which be believed he could show took place only a few minutes away from the moment when the angle between the sight-lines from the observer to the moon and the sun were also at 90°, thus implying, as he says:

> . . . per consequens totam Lunae a Terra distantiam ad Solis a Luna distantiam insensibilem rationem habere, Terramque a Sole conspectam instar puncti apparere, & proinde distantiam oculi a Terrae centro nullam sensibilem parallaxim Solis efficere.

> . . . consequently the whole distance of the moon from the earth bears a negligible ratio to the distance of the sun from the moon, and the earth seen from the sun appears like a point, so that the distance of the [observer's] eye from the centre of the earth will give rise to no perceptible solar parallax.[59]

What is more, he claimed, this particular observation was exceptionally reliable, since it was based on direct measurement of the moon's position relative to the fixed stars (and hence to the sun), and did not involve finding that position by using lunar tables. Nor did it in any way involve an estimate of lunar parallax. And its clear implication was that the actual size of the sun must be much larger than astronomers had so far taken it to be – so large, in fact, that it would equal previous estimates of the size of the cosmos made by 'ancient astronomers' (*veteres Astronomi*).

When Cassini published these striking declarations in 1656, he was still a young man of 28. In an essay published 6 years later as part of the ephemerides prepared under the patronage of Marchese Cornelio Malvasia, a retired general, enthusiastic astronomical amateur and Senator of Bologna, he repeated the claim that the solar parallax was negligible – but only as the first of 'two hypotheses competing with one another for pre-eminence' (*duplici hypothesis inter se praestantia certantes*). The second hypothesis gave the sun at perigee a horizontal parallax of 1 minute of arc, the value favoured by Kepler, about double the value arrived at by Riccioli, implying that the sun was at that moment only 3400 earth semidiameters from the earth.[60] It was on the second basis that Cassini prepared the table of refraction and parallax included in the ephemerides. The possibility cannot be excluded that this choice may have in part resulted from the preferences of the Marchese himself, to whom Cassini owed a debt of gratitude for his support for the work on the *meridiana* of San Pietro that Cassini had undertaken in 1655–6.[61] Later in his career, when he was established in Paris under a patron (Louis XIV) who was less likely to have decided views on the solar parallax, Cassini held to his previous position, agreeing with Flamsteed, who published an open letter to him in 1673 reporting observations

indicating that that the solar parallax was 'at most 10″ and its distance 21,000 terrestrial semidiameters' (*summum 10″ & distantiam 21 000 Terrae semidiametros*); Cassini noted that his own estimate was 22,000 semidiameters.[62]

We need not here follow the detailed development of ideas about solar parallax any further. It is sufficient to say that when Verbiest spent time with Riccioli's promoter Kircher in Rome in 1652–3 (as already mentioned) it was more than likely that he would have heard of not only Riccioli's considerable reduction of the solar parallax from the value given by Tycho, but also of its virtual elimination as claimed by Cassini after his observations of April 1653, made at Riccioli's base in Bologna. The possible implications of this will emerge when we discuss the details of Verbiest's shadow calculations in December 1668.

Reproducing Verbiest's predicted shadow values: The first day

In this and the following section we shall try to answer two questions:

1. By what method, based on what textual resources, did Verbiest make his calculations of shadow lengths on 27, 28 and 29 December 1668?
2. Was his method of calculation consistent over those 3 days?

We may note that at the time of his shadow predictions Verbiest was confined to the *Dong tang* 東堂 'Eastern Church' Jesuit residence,[63] and had no access to the main Jesuit library, which was in the *Xi tang* 西堂 'Western Church' residence, at that time under the control of Yang Guangxian.[64] We know, however, that Verbiest had all that he needed to make predictions of shadow lengths during his confinement in the Jesuits' residence, since he tells us:

> Ingenue fateor, saepius ego quidem inter privatos, & domesticos parietes eiusmodi umbras antea venatus sum, & quidem stylis variis, iisque brevioribus, sed plerumque inter illas & calculum meo defectum aliquem, vel excessum observavi, quod quidem in ipsum instrumentum non exacte collocatum referendum putavi.
>
> It must in all fairness be said that I had frequently investigated such shadows within the walls of our residence, even with several different and shorter gnomons, but that I had mostly observed some deficit or surplus between the shadows and my calculations. I presumed that the reacon for this was the incorrect positioning of my instrument.[65]

It is noteworthy that Verbiest attributes any discrepancies between prediction and observation to errors in positioning his instrument (probably referring to its not having been precisely levelled or aligned north-south) rather than to any error in his method of calculation, in which he appears to be quite confident.

At no point does Verbiest tell us what astronomical texts he was using as the basis of his calculations in late December 1668. There is only one text that we can say with certainty that he had at his disposal, and that is the 1648 three volume edition of the

astronomical compendium by Andrea Argoli, the second and third volumes of which contain ephemerides giving the positions of the sun, moon and planets calculated at Rome noon at daily intervals from 1641 to 1700. We have a copy of this work from the collection of the Jesuit library in Beijing, with frequent annotations in the handwriting of Verbiest,[66] who mentions Argoli's table in his own later account of the 'restoration of European astronomy' in 1668–9.[67] It is highly significant that this text has inked horizontal marks next to the entry rows for the ephemeris data for 27 and 28 December 1668, the first two dates for which Verbiest had to make shadow predictions. Since Argoli provides ready-made computations of solar longitudes, using these tables would have spared Verbiest a considerable amount of labour and uncertainty. Even if he did not use them as the basis of the predictions he submitted, a cross-check with Argoli's tables would still have given him valuable reassurance that he had not made any gross error in his calculations.

On the other hand, Argoli's book does not contain any trigonometrical tables, nor does it give values for the refraction and parallax corrections; in itself it was therefore not a sufficient resource to enable Verbiest to complete a set of shadow predictions. He must therefore have had some other text or texts at his disposal, of which the most probable candidate is the *Xin fa li shu*, which would have provided all the data he needed.[68]

If we follow the methods for finding the position of the sun on the celestial sphere set out in the *Xin fa li shu*, in combination with Verbiest's stated value of the altitude of the north celestial pole at Beijing, we can get as far as predicting the true noon zenith distance and altitude of the sun's centre before we have to make any decisions about corrections. The value found for Beijing noon solar zenith distance on 27 December 1668 is 63;17,13°, which implies a true altitude of 26;42,47°: see Box 1 for an outline of the calculations involved. Rows have been numbered for convenience of reference. The precise sources of the data used in the table will be outlined shortly.

Box 1. Finding zenith distance and altitude of sun on 27 December 1668.

Row		**Degrees**	**Minutes**	**Seconds**	**Total seconds of arc**
1	**Winter solstice daily motion of sun near perigee, m**	1	1	20	3680
2	**Altitude of celestial pole at Beijing (stated by Verbiest), P**	39	55		143,700
3		**Hours**	**Minutes**	**Seconds**	**Total seconds of time**
4	**Time from Beijing midnight beginning 21 December 1668 to moment of true winter solstice, S (see Appendix A, Box A1)**	6	8	13	22,093
5	**Time from winter solstice to noon on 21 December, T = 12 hours – S**	5	51	47	21,107

(Continued)

Box 1. (Continued)

6		**Degrees**	**Minutes**	**Seconds**	**Total seconds of arc**
7	**Motion of sun from winter solstice** to noon on 21 December, N = m × T / (24 hours)	0	14	59	899.0019
8	Motion of sun from winter solstice to noon on 27 December, N + 6 m	6	22	59	22,979.0019
9	**From interpolation in tables, south declination, D, of solar centre at noon, corresponding to sun's motion**	**Degrees**	**Minutes**	**Seconds**	**Total seconds of arc**
10	27 December	23	22	13	84,133.34824
11	**Add polar altitude P to find zenith distance of solar centre, Z = D + P**	**Degrees**	**Minutes**	**Seconds**	**Total seconds of arc**
12	27 December	63	17	13	227,833.3482
13	**Altitude of solar centre, A = 90° – Z**	**Degrees**	**Minutes**	**Seconds**	**Total seconds of arc**
14	27 December	26	42	47	96,166.6518

Rows 1 and 2 give two important fixed parameters to be used in the calculation. Row 1 tells us how much the position of the sun shifts in longitude in 1 day. This quantity, which we label here as m, is at a maximum value at perigee, when the sun is closest to the earth and thus reaches its greatest apparent speed of motion along the ecliptic. In 1668 the perigee was about 6° to the east of the winter solstice. As can be seen from the *Xin fa li* shu table entitled *Tai yang zhou sui ping shi er xing biao* 太陽周歲平實二行表 'Table of the [daily] mean and true motion of the sun [along the ecliptic] throughout the year [counted from winter solstice]',[69] the sun's rate of daily motion was taken to be effectively constant within acceptable precision at 61 1/3 minutes[70] for 29 days after winter solstice, a fact confirmed by another table, *Xi xing bian shi biao* 細行變時表 'Table for converting small amounts of motion to time',[71] which uses the value of 1;01,20° (given as 61′ 20″) from winter solstice to 37 days thereafter. During the period of interest to us, which begins on the day when the sun is at winter solstice, 21 December, and continues for 8 days until 29 December, we may therefore safely use the value 1;01,20° for determining daily solar motion.

Row 2 gives the altitude, P, of the north celestial pole above the horizon at Beijing, as specified by Verbiest in a text he completed in early 1669, at most 2 months after the shadow trial of December 1668.[72] We may therefore adopt it here. This quantity is equal to the latitude of the place of observation; a modern value for the latitude of Beijing is identical to within 1 minute of arc.

Row 4 gives the time interval between the preceding midnight at Beijing and the true moment of winter solstice, when the sun is at a longitude of 270° measured from its

spring equinox position. The process by which this quantity is derived from tabulated mean data is explained in Appendix A. Since we shall be concerned with positions of the sun at noon, we subtract this quantity from 12 hours in Row 5 to obtain T, the time interval from winter solstice to noon on the relevant day, 21 December.

In row 7, we go on to use the values of the daily motion m and the time T just calculated to find how far the sun moves from its winter solstice position by noon, $N = m \times T/(24\text{ hours})$. In row 8, we add 6 m to find the motion of the sun from winter solstice at the noon of interest to us, 27 December.

We now consult another table, entitled *Huang chi er dao xiang ju wei du biao* 黄赤二道相距緯度表 'Table of the separation of the ecliptic and equator in degrees of declination', which appears to be a direct translation of an equivalent table by Tycho Brahe.[73] Like its original, the Chinese table given by the Jesuits begins at spring equinox; degrees from winter solstice are counted backwards from the end of the table in the lower two registers at intervals of 10 minutes of arc. The values corresponding to the noon motions from winter solstice on the relevant days must be found by interpolation. Thus, for 27 December, for which the motion is 6;22,59°, we look up the tabulated values immediately above and below (with their differences conveniently tabulated) to find:

Motion	Declination (south)	
6;20.00°	23;22,22°	
	Difference	−0;00,29°
6;30,00°	23;21,53°	

We thus reckon the amount to be subtracted from the first declination as:

$$-0;00,29° \times (0;02,59°/0;10,00°) = -29'' \times (179''/600'') = -8.65''$$

So the resultant value of the south declination of the sun is:

$$23;22,22° - 0;00,08.65° = 23;22,13° \text{ to the nearest second of arc.}$$

This is the declination value, D, of the centre of the sun for noon on 27 December in row 10. By adding the polar altitude P we obtain the distance of the centre of the sun from the zenith:

$$Z = D + P, \text{ yielding the value in row 12.}$$

$$39;55,00° + 23;22,13° = 63;17,13°$$

The altitude of the centre of the sun is:

$$A = 90° - Z \text{ in row 14.}$$

$$90° - 63;17,13° = 26;42,47°$$

Using this information, we now have to choose values for the following three corrections in order to find the apparent zenith distance of the upper limb of the sun from the true zenith distance of the sun's centre, and thus to predict the length of a gnomon shadow:

(a) The angle representing refraction, to be subtracted from the true zenith distance of the sun's centre.
(b) The angle representing parallax, to be added to the true zenith distance of the sun's centre.
(c) The angle representing the sun's semidiameter, to be subtracted from the true zenith distance of the sun's centre.

If we make the assumption that Verbiest would have uncritically adopted the values found in *Xin fa li shu*, we would find the following values for these corrections:

(a) Refraction: 0;02,04°, by interpolating for the solar altitude in the table of refraction given in *Xin fa li shu*, *Ri gao qing meng qi cha biao* 日高清蒙氣差表 'Table of the difference [caused by] clear and turbid *qi* according to the altitude of the sun'.[74] This short table gives values for every 2° of altitude. For an altitude of 26;42,47°, the relevant values are 0;02,15° for 26° and 0;01,45° for 28°, a change of –0;00,15° for 1° altitude:

$$-\ 0;00,15° \text{ x } 00;42,47°/1° \ = \ -\ 0;00,15° \ * \ \left(2567''/3600''\right) \ = \ -\ 0;00,11°$$

So $0;02,15° \ - \ 0;00,11° \ = \ 0;02,04°$ is the value required.

(b) Parallax: 0;02,46° by interpolating for the solar altitude in the table of parallax given in *Xin fa li shu*, *Zui gao san ju di ban jing cha biao* 最高三距地半徑差表 'Table of the parallax difference [resulting from] the semidiameter of the earth for three distances from the apogee',[75] using the values corresponding to positions near perigee. For an altitude of 26;42,47°, the relevant values are 0;02,47° for 26° and 0;02,45° for 27°, −0;00,02° change for 1°:

$$-0;00,02° \text{ x } 00;42,47°/1° \ = \ -\ 0;00,02° \ * \ \left(2567''/3600''\right) \ = \ -\ 0;00,01°$$

So $0;02,47° \ - \ 0;00,01° \ = \ 0;02,46°$ is the value required.

(c) Semidiameter of the sun: 0;15,30°, the value corresponding to perigee in the table of solar semidiameters given in *Xin fa li shu*, *Shi ban jing biao* 視半徑表 'Table of apparent semidiameters'.[76]

As a result of applying these corrections, we arrive at an apparent noon zenith distance for the sun's upper limb of

$$63;17,13° - \ 0;02,04° \ + \ 0;02,46° \ - \ 0;15,30° \ = \ 63;02,25°$$

We thus obtain for s, the *umbra recta* cast by the sun's upper limb of the 8.49 *chi* gnomon used on that day:

$$\mathrm{s} \ = \ \mathrm{h.tan}\left(\mathrm{z}\right) \ = \ 8.49 \ \textit{chi} \times \ \tan\left(63;02,25°\right)$$

$$= \ 16.692 \ \textit{chi}, \ 16.69 \ \textit{chi} \text{ to the precision used by Verbiest.}$$ [77]

The value of the zenith distance that would have given the precise length actually predicted by Verbiest, 16.66 *chi*, is 62;59,47°. The discrepancy, 0;02,38° is not negligible in comparison to the values of parallax and refraction applied. What might be the reason for such a large discrepancy?

Let us look more closely at the value of the parallax correction used in the above calculation, As we have seen, it is highly unlikely, given his studies in Europe, that Verbiest would have been unaware that Tycho's parallax values of half a century earlier, repeated in *Xin fa li shu*, were very far from the truth, and that astronomers such as Riccioli were adopting values for the distance of the sun considerably greater than Tycho's, leading to much smaller solar parallaxes – or, in the case of Cassini, reporting his observations of 1653 (see above), no perceptible parallax at all. For Verbiest, confined in the *Dong tang*, the advantage of following Cassini would have been that it entailed simply treating solar parallax as negligible, without the need to look up values in a text like Riccioli's to which he might not have had access at the time.

If accordingly we set the solar parallax to zero, we find that the shadow length predicted would have been:

$$\begin{aligned} s &= h.\tan\left(z\right) = 8.49\,chi \times \tan\left(62;59,39°\right) \\ &= 16.66\,chi \text{ to Verbiest's precision.} \end{aligned}$$

This is the length he actually predicted for the first day, 27 December. It therefore seems highly likely that Verbiest did make the assumption that the parallax was imperceptible compared to other relevant quantitites.

Reproducing Verbiest's predicted shadow values: The second and third days

Now we have succeeded in reproducing the shadow prediction for the first day by a highly plausible method, we would expect to be able to do the same for the second and third days using the same procedure. But this turns out not to be the case. If, for instance, we use the *Xin fa li shu* data and methods, again treating the parallax as negligible, we obtain the results shown in Table 3, each shown to the same precision as the corresponding prediction. For full details of the calculations see Appendix B, Box A2.

The discrepancies between calculation and prediction for the second and third days are striking.

Lest it should be thought that this result is due to some anomaly in the data and calculation methods specified in *Xin fa li shu*, we may compare the results that Verbiest could have obtained from two other very different sources. Firstly, let us consider an obvious source that Verbiest might have used as an error check on his calculations – the ephemeris of Argoli, which we know was in his possession during his confinement. If we use Argoli's values for Rome noon longitudes of the sun, and interpolate to find the values at Beijing noon using Verbiest's own value of 6 hours 42 minutes as the time difference between the two capitals,[78] then use Argoli's tables to find the sun's declination before applying the same polar altitude and corrections we used above, we obtain the results in Table 4, again shown with the same precision used by Verbiest.

Table 3. Reproducing Verbiest's shadow predictions for first and subsequent days, using *Xin fa li shu*.

Date, 1668	Verbiest's gnomon height H, *chi*	Tangent of apparent zenith distance of upper limb, tan (Z'), interpolated from *Xin fa li shu* tables	Predicted umbral shadow length, U = H × tan (Z'), *chi*, to Verbiest's precision	Verbiest's stated shadow lengths, *chi*
27 December	8.49	1.96265	16.66	16.66
28 December	2.2	1.95761	4.307	4.345
29 December	8.055	1.95247	15.73	15.83

Table 4. Shadows calculated using Argoli's tables to find longitude and declination of sun.

Date, 1668	Verbiest's gnomon height H, *chi*	Tangent of apparent zenith distance of upper limb, tan (Z')	Predicted umbral shadow length, U = H × tan (Z'), *chi*	Verbiest's stated shadow lengths, *chi*
27 December	8.49	1.96175831	16.66	16.66
28 December	2.2	1.95745869	4.306	4.345
29 December	8.055	1.95263945	15.73	15.83

Table 5. Shadows calculated using Rudolphine Tables to find longitude and declination of sun.

Date, 1668	Verbiest's gnomon height H, *chi*	Tangent of apparent zenith distance of upper limb, tan (Z')	Predicted umbral shadow length, U = H × tan (Z'), *chi*	Verbiest's stated shadow lengths, *chi*
27 December	8.49	1.962203145	16.66	16.66
28 December	2.2	1.957715309	4.307	4.345
29 December	8.055	1.952616215	15.73	15.83

For full calculation details, see Appendix C, Box A3. The similarity with the *Xin fa li shu* results is evident. The shadow length for the first day again matches Verbiest's prediction. But the shadows for the second and third days differ from the recorded predictions by very similar amounts to those found previously.

If we choose a another means of calculation which, while less likely, might still have been used by Verbiest under the circumstances in which he found himself – the Rudolphine Tables of Kepler – we obtain the results in Table 5.

For full details of the calculations, see Appendix D, Box A4. The result for the first day's shadow is still identical to Verbiest's to within the precision he applies – but once more we see a worse match with Verbiest's predictions for the next 2 days, with results very similar to those previously calculated.

If we look again at the implications of Verbiest's data for gnomon height and shadow length (which as we have are attested by multiple sources in both Chinese and Latin), it

Table 6. Apparent zenith distances implied by Verbiest's data, and by other predictive methods.

1	2	3	4	5	6	7
Date, 1668	Verbiest's gnomon height H, *chi*	Verbiest's stated shadow lengths, *chi*	Apparent noon zenith distance from shadow length and gnomon height implied by Verbiest's data, degrees	Change of noon zenith distance from preceding day implied by Verbiest's data, degrees	Change of noon zenith distance from preceding day found from *Xin fa li shu* data, degrees	Change of noon zenith distance from preceding day found from modern data, degrees
27 December	8.49	16.66	62.996			
28 December	2.205	4.345	63.093	0.097	−0.052	−0.052
29 December	8.055	15.83	63.031	−0.062	−0.061	−0.061

can be seen that they have a highly problematic feature which is quite at odds with astronomical reality (Table 6).

Since winter solstice fell on December 20th, the noon sun must have been steadily rising in the sky during the 3 days from 27 to 29 December, so that its zenith distance steadily decreased. Columns 6 and 7, which record the changes in noon zenith distances predicted by the *Xin fa li shu* and by modern calculations (Starry Night Pro), show the expected pattern in identical amounts, as do the calculations using Argoli and the Rudolphine Tables (not shown here for brevity). Column 5 shows the changes implied by Verbiest's stated values for gnomon height and shadow length, and there the contrast is striking. The change from the second to third day is close to that predicted in columns 6 and 7, but from the first to the second day it is implied that the zenith distance *increases* by an amount almost double the expected decrease. There is no way that such a change in zenith distance could result from any astronomical calculation based on the actual motion of the sun during the relevant period shortly after winter solstice, during which, as already noted, zenith distance steadily decreases.

The only possible conclusion to be drawn is that whatever Verbiest's method of calculation was for the shadow on the first day, he did not calculate the shadows on the following two days by the same method.

What might have motivated Verbiest to make a major change in his method of calculation after the first day? We suggest that the answer to this lies in something that happened on the observatory at noon on 27 December. As has already been set out in Cullen and Jami 'Christmas 1668 and after' (see Note 1, pp. 21–28), a serious problem arose on that first day, which Verbiest nowhere acknowledges in his own writings – indeed he claims that each day's prediction was an unqualified success. However, the report of that day's work submitted to the emperor by the responsible officials, while agreeing with Verbiest's prediction of 16.66 *chi*, notes that his two adversaries refused to concede that this value

was correct, and objected that the shadow predicted by Verbiest and marked on the horizontal scale in advance was too short:

> 南懷仁等將表影高做成八尺四寸九分。正午日影，到一丈六尺六寸六分之處畫界限。日到正午，我等公同看。得日影正合着所畫之制。楊光先說影已多九分等語。吳明烜朔已多六分等語。因本日具題。
>
> Verbiest and his colleagues made the height of the gnomon 8 *chi* 4 *cun* 9 *fen* [8.49 *chi*]. As for the shadow at noon, he drew a limiting line at the place where it reached 1 *zhang* 6 *chi* 6 *cun* 6 *fen* [16.66 *chi*]. When the sun reached noon, we all looked together, and found that the solar shadow exactly matched with the limit that had been drawn. Yang Guangxian spoke to the effect that it was 9 *fen* [0.09 *chi*] longer, and Wu Mingxuan spoke to the effect that it was 6 *fen* [0.06 *chi*] longer. So on the same day we memorialized accordingly.[79]

The response from the emperor was immediate:

> 旨：二十五日二十六日再測.
>
> Rescript: 'Measure again on the 25th and 26th days [i.e. 28 and 29 December].'[80]

It seems obvious what went wrong: Verbiest had carefully predicted the length of the umbral shadow of the gnomon, cast by the sun's upper limb, as was normal practice in Europe when he learned astronomy – but both of his rivals saw that there was in fact a visible though fainter shadow continuing past the line marked by Verbiest. As Verbiest's colleague Gabriel de Magalhães complained in his letter of 2 January 1669, Yang Guangxian and Wu Mingxuan were looking at the penumbral shadow which was visible beyond the end of the umbra:

> Só o adversario, e o mouro, e o Colao China, começarão maliciosamente a calumniar a acção, para todos tão rara, maravilhosa e nunca vista. Calumniavão elles, e como ignorantes do que o Poeta disse: *Confinia lucis et umbrae*; e do que os mathematicos dizem: umbraginem ou penumbram, fazião sombra verdadeira e falsa que he o mesmo que umbrago ou penumbra.
>
> Only the Adversary [Yang Guangxian], and the Moor [Wu Mingxuan], and the Chinese Colao [Grand Secretary Li Wei 李霨] began maliciously to calumniate what had been done, [which appeared] to everybody so rare, marvellous and never before seen. They calumniated, ignorant of what the poet said of '*the borders between light and dark*'; and of what mathematicians call the umbra or the penumbra, making true and false shadows which are the same as the umbra and penumbra.[81]

Under these circumstances, then, the emperor took the prudent course of ordering that the trial should be continued for a further 2 days. For the second day, a much shorter gnomon 2.2 *chi* in height was specified.[82] Since this was about a quarter of the length of the gnomon used on the first day, any perceived errors would have been proportionately reduced, which would have made objections by Verbiest's opponents less easy to sustain. All sources agree that there was no dissent expressed on that day. But for the third day,

the gnomon length specified was close to that of the first day, on which major shadow length discrepancies had been complained of. If this had happened again, it is unlikely that the emperor would have been any more willing to treat Verbiest as having gained a clear success than he had been on the first day.

In this context, the results of a comparison between calculation and Verbiest's stated prediction for the third day are highly suggestive. As we have seen, Verbiest seems to have used the result of calculation without modification on the first day. But on the third day, the prediction he put forward exceeded the unmodified calculated result rounded to the same precision by:

$$\left(15.83 - 15.73\right) chi = 0.10\ chi = 10\, fen$$

This is very close to the amount by which Yang Guangxian had complained that the shadow had fallen short on the first day. It may be that in his urgent need to extinguish any possibility of dissent on the last day, Verbiest simply increased his prediction for that day by an amount large enough to make up for the 'missing shadow' of which Yang Guangxian had complained on the first day for a gnomon of similar height . But a more general procedure seems a more probable choice by Verbiest: the same result would have been obtained by his decreasing solar altitude by 0;09,00°, about a little under 2/3 of the value of 0;15,30° for the sun's semidiameter that Verbiest is likely to have adopted – so that he would have been allowing for the tendency of his adversaries to include part of the penumbra in the shadow length by predicting the shadow cast by a point some way between the sun's centre and its upper limb, rather than the upper limb itself. Applying the same shift to the calculation for the second day produces a shadow prediction of 4.335 *chi*, which is less than 0.25 % away from the value said to have been given by Verbiest.[83] On this basis, it appears that Verbiest adjusted his method of calculation for the second and third days of the trial to allow for the fact that the spectators of his predictions considered that the end of gnomon shadows lay some way into the penumbra, rather than at the end of the umbra itself.

Conclusion

As we have seen, although gnomon observations traditionally played a larger role in astronomical practice in China than they did in Europe, it is very unlikely that Verbiest was unacquainted with such matters before his arrival in Beijing. The principal Jesuit astronomical writer active during the years preceding his departure for the East, Giambattista Riccioli, was based in Bologna and Verbiest is likely to have read his account of how he had made observations in the church of San Pietro with a gnomon larger than any to be found in China. Verbiest must therefore have approached the task of predicting the noon gnomon shadow in Beijung with some confidence. But although he was finally judged to have been successful, we have seen that the road to victory demanded that he should significantly modify his approach for the second and third days of observation.

This modification did not entail any compromise with the basic astronomical science used by Verbiest. On the first day, he calculated the shadow length with which he was

familiar – the umbral shadow cast by the sun's upper limb. But when it came to the test of observation, it became evident from their protests that his opponents did not see the 'real shadow' in their terms as being limited to the umbra, but as extending some way into the more visible parts of the penumbra. This was not a scientific error on their part, but was purely a difference of convention. In response, Verbiest appears to have adapted his calculations on subsequent days, so as to predict the shadow as he now knew that his opponents would recognise it. Such a change is evocative of the basic principle of the Jesuit missionary strategy of 'accommodation', in which one presents the substance of one's message in a way that enables one's audience to receive it.[84] As Ignatius of Loyola put it 'Enter through the door of the other so as to make them leave through our door': Verbiest wished to convince the supervising officials, and the emperor himself, of the efficacy of his methods of astronomical calculation – ultimately, of course, in the interests of propagating Christianity in China by re-establishing the Jesuit mission that had been terminated in 1665.[85] So on the second and third days he showed that he could predict the kind of shadow that his opponents thought he should be predicting, and in this he appears to have succeeded admirably.

What is more, Verbiest appears to have been quite open about what he was doing, since, as de Magalhães tells us in his letter of 2 January 1669, on 28 December he presented a diagram to the supervising officials explaining the distinction between the umbra and the penumbra with a clarity that led one Manchu official to exclaim 'We have a great master [here]!' (*Amba supi!*). In an audience with the emperor after the successful conclusion of the trial on 29 December, Verbiest showed the diagram to the young emperor, who was apparently so pleased with Verbiest's explanation that he insisted on keeping the diagram on which it was based.[86]

By the middle of the 17th century there were those in non-Catholic Europe who might have seen Verbiest's flexibility as all too typical of what a modern author has called the 'facility with which Jesuit scientists adapted their work to [. . .] many different environments' with 'serious consequences for the way in which Jesuit statements about the natural world were evaluated by natural philosophers outside the order'.[87] Such an evaluation of Verbiest's actions in the present case would however be baseless. Verbiest's calculation techniques were as accurate as the astronomy of his day permitted them to be, and his flexible use of those techniques to predict the quantities that he found that his Chinese opponents regarded as significant was not only unexceptionable, but showed his mastery of the topic.

ORCID iD

Christopher Cullen https://orcid.org/0000-0003-1369-5529

Notes on Contributors

Christopher Cullen is Emeritus Director of the Needham Research Institute, Cambridge, Emeritus Honorary Professor of the University of Cambridge, and Emeritus Fellow of Darwin College. His recent publications on the history of astronomy in China include *Heavenly Numbers: Astronomy and Authority in Early Imperial China* (Oxford University Press, 2017) and *The Foundations of Celestial Reckoning: Three Ancient Chinese Astronomical Systems* (Routledge, 2017). In 2020, he published with Catherine Jami 'Christmas 1668 and After: How Jesuit Astronomy Was Restored

to Power in Beijing' (*Journal for the History of Astronomy*, Vol. 51(1) 3–50). He is editor of the Needham Research Institute monograph series, published by Routledge.

Catherine Jami is a Senior Researcher at the French National Centre for Scientific Research (CNRS). A historian of early modern science, she works on the circulation of knowledge between Europe and East Asia and on the appropriation of learning by the Manchu Qing dynasty (1644–1911) in the seventeenth and eighteenth centuries, with a special interest in the mathematical sciences. Her publications include *The Emperor's New Mathematics: Western Learning and Imperial Authority during the Kangxi reign (1662–1722)* (Oxford University Press, 2012) and the edited volume *Individual Itineraries and the Spatial Dynamics of Knowledge: Science, Technology and Medicine in China, 17th–20th centuries* (Paris, Collège de France, 2017). In 2020, she published with Christopher Cullen 'Christmas 1668 and After: How Jesuit Astronomy Was Restored to Power in Beijing' (*Journal for the History of Astronomy*, Vol. 51(1) 3–50). She is editor of the journal *East Asian Science, Technology, and Medicine*.

Notes

1. C. Cullen and C. Jami, "Christmas 1668 and After: How Jesuit Astronomy was Restored to Power in Beijing," *Journal for the History of Astronomy*, 51 (2020), 3–50.
2. Nan Huairen 南懷仁 (Ferdinand Verbiest), *Qin ding xin li ce yan ji lue* 欽定新曆測驗紀略 *(A summary of observations in accordance with the new astronomical system, imperially commissioned)* (1669), p. 3b; abbreviated as *CYJL*.
3. *CYJL*, pp. 3b–4a.
4. In this assertion he was quite correct. As early as 78 BCE we have records of a dispute about the validity of a system being settled by an imperial order to conduct a comprehensive and systematic programme of observations of solar and lunar phenomena extending over two years and involving more than twenty persons: see *Han shu* 漢書 (History of Western Han dynasty), Ban Gu 班固 (32–92 CE), (Beijing, Zhonghua Shuju, probably completed in present form c.110 CE, punctuated edition of 1962), ch. 21a, p. 978 and C. Cullen, *Heavenly Numbers: Astronomy and Authority in Early Imperial China* (Oxford: Oxford University Press, 2017), p. 110. The practice of observational testing continued over all the succeeding centuries of official astronomical activity.
5. On this point, we differ from P. Chu, "Scientific Dispute in the Imperial Court: The 1664 Calendar Case," *Chinese Science*, 14 (1997), 7–34, 31.
6. G.J. Toomer, *Ptolemy's Almagest* (Princeton, NJ: Princeton University Press, 1998), II.5, pp. 80–2.
7. Toomer, *op. cit.* (Note 6), I.12, pp. 61–3.
8. Ruan Yuan 阮元 (1764–1849) (eds), *Shi san jing zhu shu* 十三經註疏 *(The thirteen classics with commentaries and subcommentaries)* (Taipei: Yiwen Press, 1973 reprint of original of 1815), Vol. 3, p. 154a.
9. Song Lian 宋濂 (1310–1381), *Yuan shi* 元史 *(History of the Yuan dynasty)* (Beijing: Zhonghua Press, completed 1370, punctuated edition of 1976), ch. 52, p. 1121; see also the translation in N. Sivin, *Granting the Seasons: The Chinese Astronomical Reform of 1280, With a Study of its Many Dimensions and a Translation of its Records* (New York, NY: Springer, 2009), pp. 254–5.
10. Sivin, *op. cit.* (Note 9) gives 10 meters as the approximate equivalent of 5×8 *chi* = 40 *chi*, based on the taking the 'ritual *chi*' of the Yuan dynasty as 24.525 cm. or 0.24525 m (Sivin, *op. cit.* (Note 9), pp. 67–8).
11. Sivin, *op. cit.* (Note 9), pp. 183–8 and 569–71.

12. Song Lian, *op. cit.* (Note 9), ch. 52, pp. 1122–9, Sivin, *op. cit.* (Note 9), pp. 258–69.
13. We shall see possible signs of this when we come to consider the details of how Verbiest appears to have calculated his predicted shadow lengths, particularly with regard his treatment of solar parallax. It is noteworthy that Verbiest had already proposed such a test for the validity of European astronomy early in 1665, during the trial of the Jesuits and their Chinese colleagues: see Cullen and Jami, *op. cit.* (Note 1), pp. 18–9.
14. *CYJL*, pp. 6a–6b.
15. F. Verbiest, *Astronomia Europaea sub imperatore Tartaro Sinico Cám Hý appellato ex umbra in lucem revocata à R.P. Ferdinando Verbiest Flandro-Belga e Societate Jesu* (Dillingen: Joannis Caspari Bencard, per Joannem Federle, 1687), III, pp. 8–11, translated in F. Verbiest and N. Golvers, *The Astronomia Europaea of Ferdinand Verbiest, S.J.* (Dillingen, 1687): text, translation, notes and commentaries (Nettetal: Steyler Verlag, 1993), pp. 62–5. A Latin manuscript, dated 1676, which appears to be an early version of the text of Verbiest's 1687 book has been translated and commented in N. Golvers and E. Nicolaidis (eds), (2009) *Ferdinand Verbiest and Jesuit Science* in 17th century China: an annotated edition and translation of the Constantinople manuscript (1676) (Athens and Leuven: Institute for Neohellenic Research and Ferdinand Verbiest Institute, 2009).
16. *Xi chao ding an* 熙朝定案 *(Cases decided during the [Kang]xi reign)*, Nan Huairen 南懷仁 (Ferdinand Verbiest), (Rome: National Central Library, 72 C530.1, after 1669), pp. 2a–3a; abbreviated as *XCDA*.
17. Exceptionally, in the account of the first day's shadow trial in Verbiest, *op. cit.* (Note 15), translated in Verbiest and Golvers, *op. cit.* (Note 15), Verbiest gives a slightly more precise figure, expressed in Latin as '*16.pedibus, praeterea sex digitis, & sex decimis, ac media'* ('16 feet, and further six inches and six tenths [of an inch] and a half'), i.e. 16.665 feet. The manuscript precursor of the 1687 book studied in Golvers and Nicolaidis (eds), *op. cit* (Note 15), gives the value '*pedibus 16, digitis 6 et 6/10 lineis sive 6/10*', which the translators render as 16.666 feet.
18. Chu, *op. cit.* (Note 5), pp. 28–9, using the calculations of Huang Yi-long 黃一農, "Qing chu tian zhu jiao yu hui jiao tian wen jia jian de zheng dou 清初天主教與回教天文家間的爭鬥 (The struggle between Catholic and Muslim astronomers in early Qing)," *Jiu zhou xue kan* 九州學刊, 5 (1993), 47–69, 63. Note that Huang gives the days of observation in terms of the day number within the 11th lunar month of Kangxi 7 (1668–1669). Unfortunately, there seems to be a confusion in Chu's transcription, since he says the dates given refer to days "of the twelfth month of 1668". If by that he meant to refer to the 12th lunar month of Kangxi 7, then he has simply misread Huang. If he means December 1668, then since Kangxi 7/11/24 is 27 December 1668, he has introduced a three-day shift in the dates.
19. The Horizons ephemeris program, https://ssd.jpl.nasa.gov/horizons/app.html#/, accessed 18 October 2021.
20. *CYJL*, p. 5a.
21. For a detailed analysis of the methods of the Season granting system, see Sivin, *op. cit.* (Note 9), pp. 445–8 for how to find the sun's position on the ecliptic at the noon of any day, and pp. 487–92 for how to find the sun's declination corresponding to that position.
22. See Sivin, *op. cit.* (Note 9), pp. 577–9 for the survey. The capital Dadu 大都, modern Beijing, was given a polar altitude of 40 $^{5}/_{6}$ *du*, 40.25° in western degrees, a little too large in comparison with the modern value of 39.91°. The possible significance of this discrepancy is discussed by Sivin in pp. 487–8.
23. A date given in this form abbreviates the full designation 'Year 4 of the Chongzhen reign period, month 1, day 28'.
24. See Shi Yunli 石云里 and Chu Longfei 褚龙飞, *Chong zhen li shu he xiao* 崇祯历书合校 *(Collated edition of the Chong zhen li shu)* (Hefei 合肥, Zhongguo ke xue ji shu da xue

chu ban she 中国科学技术大学出版社, 2017), pp. 25–8 for the memorial in which this text was presented; the tables themselves, tabulating functions at intervals of one minute of arc to at least 5-figure precision, are in pp. 794–883 The European sources of the tables and of the explanations given of how they were calculated and may be applied are discussed in J.-P. J. Chen, "Trigonometric Tables: Explicating their Construction Principles in China," *Archive for History of Exact Sciences*, 69 (2015), 491–536. H. Verhaeren, *Catalogue de la Bibliothèque du Pé-Tang* (Beijing: Imprimerie des Lazaristes, 726, no. 2477, 1949), notes the presence in the Jesuits' library of a copy of B. Pitiscus, *Sinuum, tangentium et secantium canon manualis accomodatus ad Trigonometriam. / Bartholomaei Pitisci Grünbergensis Silesii* (Heidelbergae: Typis I. Lancelloti, Acad. typo. impensis I. Rosae, 1613), labelled as 'Pequino Missnis – Missionis Sinensis Patrum Societatis Jesv.'

25. The *umbra versa* 'turned shadow' was the shadow of a horizontal gnomon on a vertical scale.
26. For the memorial of submission, see Shi Yunli and Chu Longfei, *op. cit.* (Note 24), pp. 30–1.
27. The exception, the text notes, is when the auxiliary device known as a *ying fu* 景符 'shadow aligner' had been used. This device consisting of a thin bronze plate pierced with a small hole, acted like a pinhole camera, enabling a small sharp image of the top of the gnomon with the sun behind it to be cast on the horizontal scale, thus indicating the point G corresponding to the sun's centre. Such a device was used with the giant gnomon created as part of the project that defined the Season Granting system, as mentioned above: see Sivin, *op. cit.* (Note 9), pp. 187–8.
28. See N. Golvers, *Ferdinand Verbiest, S.J. (1623–1688) and the Chinese Heaven: The Composition of the Astronomical Corpus, its Diffusion and Reception in the European Republic of Letters* (Leuven, Belgium: Leuven University Press, 2003), p. 19 n.16.
29. Cullen and Jami, *op. cit.* (Note 1), p. 8 and note 37.
30. See Golvers, *op. cit.* (Note 28), p. 19.
31. See Golvers, *op. cit.* (Note 28), pp. 20–2 and N. Golvers, "Ferdinand Verbiest" (2019) http://www.conimbricenses.org/encyclopedia/verbiest-ferdinand/ for the time spent in Italy in 1655, with possible mathematical studies in Genoa.
32. For a general discussion of Riccioli's work, see A. Dinis, "Giovanni Battista Riccioli and the Science of his Time," in M. Feingold (ed.), *Jesuit Science and the Republic of Letters* (Cambridge, MA; London: MIT, 2002), pp. 195–224, and the short biography in L. Campedelli, "Riccioli, Giambattista," in C.C. Gillispie, F.L. Holmes and N. Koertge; Thomson Gale (Firm) (eds), *Complete Dictionary of Scientific Biography*, Vol. 11 (Detroit, MI: Charles Scribner's Sons, 2008), pp. 411–2.
33. G. Riccioli, *Almagestum novum astronomiam veterem novamque complectens observationibus aliorum, et propriis novisque theorematibus, problematiibus, ac tabulis promotam, in tres tomos distributam*. Published (despite the title) in two volumes: Tomus primus [Books 1 to 7] and Pars posterior tomus primus [Books 8 to 10] (Bononiae, ex typographia hæredis Victorii Benatii 1651).
34. E.G. Forbes (ed), *The Gresham Lectures of John Flamsteed* (London: Mansell, 1975), Preface, p. xv; in (for instance) Flamsteed's second lecture, delivered on 4 May 1681 in which he discusses attempts to establish the dimensions of the solar system and measure parallax from antiquity to his own day, he mentions 'Ricciolus' twice, and cites material identifiable as being drawn from Riccioli on no less than eight occasions. See Lecture 2, pp. 93, 95–96 and notes on pp. 101–2.
35. See the letter of Riccioli to Kircher dated from Bologna, 22 February 1662, in which Riccioli says he has dispatched the book to him, and asks for Kircher's help in boosting the sale of the work 'accelerare lo spaccio di questa opera': I. Gambaro, *Astronomia e tecniche di ricerca nelle lettere di GB Riccioli a A Kircher* (Genova, Quaderni del Centro di studio sulla storia della technica del Consiglio Nazionale delle Ricerche, 1989), p. 98. A more general

discussion of the close relations between Riccioli and Kircher 'the celebrated astronomer and the immortal encyclopaedist' is given in Gambaro chapter 2, pp. 22–30.

36. Golvers, *op. cit.* (Note 28), p. 93 and p. 108 points to the identification by N. Halsberghe in her thesis ""Xin zhi lingtai yi xiang zhi": Vertoog over de nieuwgebouwde instrumenten op het observatorium, Ferdinand Verbiest, Beijing, 1674" (K.U. Leuven University, Leuven, Belgium, 1992), p. 482, of an illustration borrowed by Verbiest from G. Riccioli, *Geographiae et hydrographiæ reformatæ libri dvodecim . . .* (Bononiæ, Ex typographia Hæredis Victorii Benatii, 1661), p. 241 figure II, for fig. 106 of Nan Huairen 南懷仁 (Ferdinand Verbiest) *Xin zhi yi xiang tu* 新製儀象圖 (Illustrations of newly manufactured astronomical instruments) (Beijing, 1674). Given the date of Riccioli's book it appears that Verbiest had continued to acquire works by him after arriving in China. Verbiest's eagerness to obtain more books by Riccioli was noted by Intorcetta in 1671: see N. Golvers, *Libraries of Western Learning for China: Circulation of Western Books Between Europe and China in the Jesuit Mission (ca. 1650–ca. 1750)* (Leuven, Belgium: Ferdinand Verbiest Institute, 2012), p. 67.
37. See Verhaeren, *op. cit.* (Note 24), 760, nos. 2579–82. The presence of a book in Verhaeren's catalog does not by itself tell us when the copy in question first reached Beijing. Some of Verhaeren's entries note the presence of inscriptions indicating how and when they arrived, as in the case of Verbiest's copy of Argoli's ephemeris (see note 66), but he records nothing suggesting ownership by Verbiest in the copies of *AN* that he catalogues.
38. Riccioli, *op. cit.* [Books 1 to 7] (Note 33), pp. 131–2; J.L. Heilbron, *The Sun in the Church: Cathedrals as Solar Observatories* (Cambridge, MA; London: Harvard University Press, 1999), pp. 68–75 discusses the wider context of this construction.
39. I use here the equivalence 1 foot of Bologna = 0.3805 metres; see P. Kelly, *The Universal Cambist, and Commercial Instructor: Being a Full and Accurate Treatise on the Exchanges, Monies, Weights and Measures of all Trading Nations and their Colonies; With an Account of their Banks, Public Funds, and Paper Currencies* (London, Printed for the author, 1821), p. 43.
40. See G. Riccioli, *Astronomiae reformatæ tomi duo: quorum prior observationes, hypotheses et fundamenta tabularum, posterior præcepta pro vsu tabularum astronomicarum et ipsas tabulas astronomicas CII continet: prioris tomi in decem libros diuisi, argumenta pagina sequenti exponuntur* (Bononiæ, Ex Typographia Hæredis Victorii Benatii, 1665), pp. 5–7, also Heilbron, *op. cit.* (Note 38), pp. 89–93.
41. Riccioli, *op. cit.* [Books 1 to 7] (Note 33), p. 16.
42. For brevity and clarity, in this article we use the standard convention that represents an angle equal to X degrees, Y minutes and Z seconds in the sexagesimal format X;Y,Z°
43. See Nan Huairen 南懷仁 (Ferdinand Verbiest 1623–1688), *Xin zhi ling tai yi xiang zhi* 新制靈臺儀象志 *(An account of the newly constructed instruments for the imperial observatory)* (1674), *Si ku quan shu* edn, ch. 1, pp. 1b–2a. The altitude and zenith distance must have referred to the sun's upper limb. We suspect in any case that this shadow calculation, with its result given to a precision of 0.001 *chi* (about 0.32 mm) is a theoretical construct, since the measurements described are said to have taken place on 3 February 1669, and the contemporary account of that day's observations in *CYJL*, pp. 35a–35b only describes observations of angle; no gnomon is mentioned.
44. See Nan Huairen *op. cit.* (Note 43), p. 34b. For parallax and refraction, Verbiest uses the Chinese translations introduced in *CZLS*, respectively *di ban jing cha* 地半徑差 'earth semi-diameter difference' and *qing meng qi cha* 清蒙氣差 'clear and turbid *qi* difference'. In this context, Verbiest also refers to another kind of parallax, *shi cha* 視差 'apparent difference', which refers to differences in observed celestial longitude of sun. moon and planets caused by their motion in eccentric orbits at varying distances from the earth, seen by an observer in

a particular terrestrial position: Shi Yunli and Chu Longfei, *op. cit.* (Note 24), p. 206. But this does not affect the observations of noon altitude and zenith distance that concern us here.

45. A detailed historical survey of the development of estimates of the relevant dimensions is given in A. Van Helden, *Measuring the Universe: Cosmic Dimensions From Aristarchus to Halley* (Chicago, IL; London: University of Chicago Press, 1986); chapters 10 and 12 are particularly relevant to the present discussion.
46. See for instance Ptolemy's references to refraction briefly in *Almagest* IX.2, in detail in *Optics* V.23–30, and to parallax in *Almagest* V.17 and V.18 (where a table is given): Toomer, *op. cit.* (Note 6), pp. 258–65.
47. N. Copernicus, *Nicolai Copernici Torinensis De revolutionibvs orbium coelestium, libri VI* (Norimbergae, apud Ioh. Petreium, 1543), Book 4, pp. 122–7. He appears however to have been unaware of the effect of refraction: see N.M. Swerdlow and O. Neugebauer, *Mathematical Astronomy in Copernicus' De Revolutionibus in Two Parts* (New York, NY: Springer, 1984), p. 238.
48. V.E. Thoren, "Tycho Brahe," in R. Taton and C. Wilson (eds), *The General History of Astronomy. Vol. 2, Planetary Astronomy From the Renaissance to the Rise of Astrophysics* (Cambridge: Cambridge University Press, 1989), pp. 3–21 and pp. 14–5.
49. For Tycho's tables, see T. Brahe, *Tychonis Brahe Dani, Astronomiae instauratae progymnasmata: Quorum haec prima pars de restitutione motuum tractat. Et praeterea de admiranda noua stella anno 1572. exorta luculenter agit* (Excudi primum coepta Uraniburgi Daniae, ast Pragae Bohemiae absoluta. Prostant Francofurti, Apud Godefridum Tampachium, 1610), p. 79 (refraction), p. 80 (parallax). The corresponding tables in Chinese are to be found in Shi Yunli and Chu Longfei, *op. cit.* (Note 24), p. 955 and pp. 956–7. The memorial submitting the final form of the section containing the tables is dated Chongzhen 4/1/28, 28 February 1631: ibid., pp. 25–8.
50. See Shi Yunli and Chu Longfei, *op. cit.* (Note 24), p. 411.
51. 1142 semidiameters is in fact Copernicus's mean distance value; for the maximum (apogee) distance he gives 1179, and for the minimum (perigee) he gives 1105: see Copernicus, *op. cit.* (Note 47), Book 4 ch. 10, pp. 122–3, and for a discussion O.E. Neugebauer, *A History of Ancient Mathematical Astronomy* (Berlin; New York, NY: Springer-Verlag, 1975), 1B5, 4a, pp. 109–11.
52. See Brahe, *op. cit.* (Note 49), pp. 97–8.
53. Described in Riccioli, *op. cit.* [Books 1 to 7] (Note 33), pp. 107–9.
54. Riccioli, *op. cit.* [Books 1 to 7] (Note 33), p. 132.
55. See the tables in Riccioli, *op. cit.* [Books 8 to 10] (Note 33), p. 668, Table IX; he notes that for the sun he used 27″ as the parallax at apogee, 28″ for parallax at mean distance, and 29″ at the perigee.
56. W.M. Smart and R.M. Green, *Textbook on Spherical Astronomy* (Cambridge; New York, NY: Cambridge University Press, 1979 reprint of 6th edition 1977), p. 420.
57. A. Van Helden, "The Telescope and Cosmic Dimensions," in R. Taton and C. Wilson (eds), *The General History of Astronomy. Vol. 2, Planetary Astronomy From the Renaissance to the Rise of Astrophysics* (Cambridge: Cambridge University Press, 1989), pp. 106–18 and 109–11.
58. G.D. Cassini, *Specimen observationum Bononiensium, quae novissime in D. Petronij Templo ad astronomiae novae constitutionem haberi c[o]epere. Videlicet observatio aequinoctii verni anni MDCLVI . . . Cui praepositae, & adiectae sunt aliae ad huius complementum pertinentes. Ex quibus multa incerta in theoria solis deteguntur . . . Motosque solis realis inaequalitas nunc primum immediatis observationibus detegitur* (Bononiae, Ex typographia H.H. de Ducijs, 1656), p. 3.

59. Cassini, *op. cit.* (Note 58), p. 4.
60. See C. Malvasia, *Ephemerides nouissimae motuum cœlestium Marchionis Cornelii Malvasiæ. . . ad longitudinem urbis Mutinæ gr. 34. 5. / ex Philippi Lansbergii hypothesibus exactissimè supputatæ. . .. Additis ephemeridibus solis, & tabulis refractionum, ex nouissimis hypothesibus Ioannis Dominici Cassini* (Mutinæ: impensis authoris, ex typographia Andreæ Cassiani, 1662), pp. 155–6, 165 and 172–3.
61. See Heilbron, *op. cit.* (Note 38), p. 89.
62. J. Flamsteed, "Johannis Flamstedii derbiensis angli ad clarissimum Cassinum epistola, novas observationes extimarum elongationum siderum Medicæorum à centro jovis, novâ sed & accuaratâ ratione habitas, exhibens; adjectis quibusdam observationibus non-vulgaribus, planetarum diametros & à fixis distantias, nec non martis acronici & perigei parallaxin, &c spectantibus," *Philosophical Transactions of the Royal Society of London*, 8 (1673), pp. 6094–6100, 6000; see also Van Helden *op. cit.* (Note 57), pp. 134–7.
63. See Verbiest and Golvers, *op. cit.* (Note 15), pp. 169–70, note 165.
64. See Verbiest and Golvers, *op. cit.* (Note 15), pp. 245–6, note 211.
65. Verbiest, *op. cit.* (Note 15), pp. 10–1, tr. in Verbiest and Golvers, *op. cit.* (Note 15), pp. 64–5.
66. A. Argoli, *Exactissimae caelestium motuum ephemerides . . . ab anno 1641 ad annum 1700* (Patavii, Italy: Typis Pauli Frambotti, 1648). This book, which once formed part of the Jesuits' Beitang library in Beijing, is now in the National Library, Beijing, where one of us (CC) was able to inspect it in June 2017. It is number 871 in the catalogue of the Beitang collection, Verhaeren, *op. cit.* (Note 24), p. 244. As Verhaeren notes, the book is annotated as 'In usu P. F. Clement'; François Clement was a Jesuit priest who sailed to China with Verbiest in 1657, but died en route at the island of Celebes in 1658: L. Pfister, *Notices biographiques et bibliographiques sur les Jésuites de l'ancienne mission de Chine. 1552-1773* (Chang-hai, Imprimerie de la Mission catholique, 1932), p.183, no. 197. It seems likely that this work then passed into Verbiest's personal keeping. For a short biography of Argoli, see O. Gingerich, "Argoli, Andrea," in C.C. Gillispie (ed.), *Dictionary of Scientific Biography*, Vol. 1 (Detroit, MI: Charles Scribner's Sons. 1970), pp. 244–5.
67. See Verbiest and Golvers, *op. cit.* (Note 15), p. 74 and Verbiest, *op. cit.* (Note 15), ch. VIII, p. 23.
68. For an analysis of the solar theory underlying the methods set out in the *Chong zhen li shu*, and modified in the *Xin fa li shu*, see Chu Longfei 褚龙飞 and Shi Yunli 石云里, "Chong zhen li shu xi lie li fa zhong de tai yang yun dong li lun《崇祯历书》系列历法中的太阳运动理论 (The Theory of Solar Motions in the Chongzhen Lishu Series)," *Ziran kexueshi yanjiu* 自然科学史研究, 31 (2012), 410–27.
69. Shi Yunli and Chu Longfei, *op. cit.* (Note 24), pp. 908–18.
70. Written in this table using the conventional abbreviation *liu yi qiang* 六一強, literally 'strengthened 61'.
71. Shi Yunli and Chu Longfei, *op. cit.* (Note 24), pp. 940–9.
72. See Nan Huairen, *op. cit.* (Note 2), p. 35b; Verbiest continues to use this value in Nan Huairen, *op. cit.* (Note 36), ch. 6, p. 1a.
73. Shi Yunli and Chu Longfei, *op. cit.* (Note 24), pp. 764–76; Tycho's table is *Tabula declinationis eclipticae . . . tropicorum obliquitatem statuit gradum 23 minut. 31 secund. 30* 'Table of declinations of the ecliptic . . . on the basis of an obliquity of the tropics of 23;31,30°' in Brahe, *op. cit.* (Note 49), pp. 81–6.
74. Shi Yunli and Chu Longfei, *op. cit.* (Note 24), p. 955; as already noted, this is a translation of the table in Brahe, *op. cit.* (Note 49), p. 79.
75. Shi Yunli and Chu Longfei, *op. cit.* (Note 24), pp. 956–7. The three distances, taken from Brahe, *op. cit.* (Note 49), p. 80, correspond to the apogee, mean distance, and perigee, in Verbiest's time roughly corresponding to summer solstice, the equinoxes and winter solstice.

76. Shi Yunli and Chu Longfei, *op. cit.* (Note 24), pp. 1251–4.
77. Here and throughout the calculations detailed in this paper, we have only resorted to rounding in the final statements of results. We have no indication of Verbiest's practice in this regard.
78. For this value, see the discussion in Appendix C.
79. *XCDA*, 2a.
80. *XCDA*, 2a.
81. See Cullen and Jami, *op. cit.* (Note 1), p. 47, note 109, where the identity of "the poet" is discussed. A full text and translation of the letter will appear as C. Cullen, *The letter of Gabriel de Magalhães, 2 January 1669: an edition and annotated translation* (Cambridge, Needham Research Institute Working Papers Series, 2022). The cited text is found on folio 271v of the original MS, ARSI, Jap.-Sin. 162, folios 269-273v.
82. See Cullen and Jami, *op. cit.* (Note 1), p. 24.
83. We may note that the 2.2 *chi* height of the gnomon for the second day (equivalent to 70.4 cm) was the quantity specified in advance by Verbiest in agreement with court officials on 27 December, and we know that de Magalhães had to work overnight to make such a gnomon, mounted on a suitable horizontal scale with screws for levelling: Cullen and Jami, *op. cit.* (Note. 1), p. 25. It would have been an obvious precaution for Verbiest to measure the actual height of the gnomon produced before making the prediction of shadow length (which he marked in advance by drawing a line on the shadow scale), rather than assuming that the gnomon was exactly of the specified height. If the height of the gnomon as he measured it on the day had been only half a *fen* (1.6 mm) greater than specified (making it 2.205 *chi* or 70.56 cm) then the shadow prediction with the adjusted solar altitude would have been 4.345 *chi*, exactly as stated.
84. See S. Tutino, "Jesuit Accommodation, Dissimulation, Mental Reservation," in I.G. Zupanov (ed), *The Oxford Handbook of the Jesuits (Electronic Text)* (Oxford: Oxford University Press, 2019), pp. 216–40.
85. N. Standaert, "Jesuit Corporate Culture as Shaped by the Chinese," in G.A. Bailey, T.F. Kennedy, S.J. Harris and J. O'Malley (eds), *The Jesuits: Cultures, Sciences and the Arts 1540-1773* (Toronto: University of Toronto Press, 1999), pp. 352–63, 357.
86. Cullen and Jami, *op. cit.* (Note 1), p. 23. See also Cullen, *op. cit*. (Note 81); the relevant text is on folios 271v and 272v.
87. M.J. Gorman, "From 'the Eyes of all' to 'Usefull Quarries in Philosophy and Good Literature': Consuming Jesuit Science 1600-1665," in G.A. Bailey, T.F. Kennedy, S.J. Harris and J. O'Malley (eds), *The Jesuits: Cultures, Sciences and the Arts 1540-1773* (Toronto: University of Toronto Press, 1999), pp. 170–89, 182–3.
88. Shi Yunli and Chu Longfei, *op. cit.* (Note 24), pp. 898–902.
89. Two values are given for this quantity under the relevant year in the collated edition of Shi Yunli and Chu Longfei, *op. cit.* (Note 24). We use the one found in the *Xin fa li shu* version of the text, which is the one with which Verbiest would have been familiar.
90. Shi Yunli and Chu Longfei, *op. cit.* (Note 24), pp. 891–2.
91. See for instance the instructions attached to the mean and true winter solstice diagram, Shi Yunli and Chu Longfei, *op. cit.* (Note 24), p. 892.
92. The equation of centre as given in the *CZLS* table appears to have been calculated in accordance with an eccentric/equant model for the sun similar to that used by Ptolemy for the three outer planets (Mars, Jupiter and Saturn), with methods equivalent to the expression for the equation $\arctan\left(\frac{2esinM}{\sqrt{\left(1-e^2sin^2M\right)}-ecosM}\right)$ where M is the mean anomaly measured from perigee and e is the eccentricity, here set at 1792 for a 10,000 deferent radius, representing the

halving of Tycho's 3584 value, as argued for by Kepler, who however chose a rounded value of 1800 for his own calculations. See J. Kepler, *Astronomia nova aitiologetos: seu physica coelestis, tradita commentariis de motibus stellæ Martis, ex observationibus G. V. Tychonis Brahe, jussu & sumptibus Rvdolphi II . . . plurimum annorum pertinaci studio elaborata Pragæ . . . / a Joanne Keplero* (Prague,1609), pp. 130 and 136.

93. Shi Yunli and Chu Longfei, *op. cit.* (Note 24), p. 940.
94. We may note that the time of *li chun* is calculated as 09:28 in Y.T. Liu, "Conversion Between Western and Chinese Calendar (722 BCE — 2200 CE)." https://ytliu0.github.io/ChineseCalendar/index.html?y=1670 (2018–2022) which attempts to reproduce Jesuit astronomical procedures using modern trigonometrical expressions, taken from or constructed on the basis of publications such as Chu Longfei and Shi Yunli, *op. cit.* (Note 68).
95. Noel Golvers, personal communication in email of 16 July 2017. The annotation is found in the copy of vol 2 p. 898 of Argoli, *op. cit.* (Note 66), in the Beijing National Library (cat. 871/123). Square brackets in the text and translation indicate places where an elision or omission in the original has been restored or explained by us; the insertion [. . .] indicates where the cited text has been abbreviated by us; the round brackets are in the original.
96. Nan Huairen 南懷仁 (Ferdinand Verbiest), *Da Qing Kang xi jiu nian shi xian li* 大清康熙九年時憲曆 *(Calendar according to the Timely Modelling system for Kangxi 9, 1670)* (1669), Copy in Library of Congress: Control Number 2014514060.
97. For a detailed account of Thomas' life and work, see C. Jami, *The Emperor's New Mathematics: Western Learning and Imperial Authority in China During the Kangxi Reign (1662-1722)* (Oxford: Oxford University Press, 2012), chapter 9, pp. 180–213.
98. See J. Kepler and T. Brahe, *Tabulae Rudolphinae, quibus astronomicae scientiae . . . restauratio continentur; a . . . Tychone . . . primum animo concepta et destinata . . . Tabulas ipsas . . . continuavit . . . perfecit, absolvit; adque causarum et calculi perennis formulam traduxit Joanne Keplerus* (Ulmae : Typis Jonae Saurii, 1627), p. 51.
99. All these quantities are tabulated in Kepler and Brahe, *op. cit.* (Note 98), Part 2, pp. 42–3. For the sun's equation of centre we use the version of Kepler's *Tabula Aequationum Solis* (Kepler and Brahe, *op. cit.* (Note 98), Part 2, 44–6) in J.-B. Morin, *Tabulae Rudolphinae ad meridianum Uraniburgi supputatae a Joanne Baptista Morino,. . . ad accuratum et facile compendium redactae* (Parisiis: apud P. Ménard, 1657), pp. 20–1, since it is considerably more convenient to use than in the formulation of the original – which is deliberately designed to reflect the complex development of Kepler's thinking on this topic, on which see W.H. Donahue, "Kepler's Approach to the Oval of 1602, From the Mars Notebook," *Journal for the History of Astronomy*, 27 (1996), 281, 283 and note 220.

Appendices: Calculation methods

Appendix A: Finding the winter solstice of December 1668

The date and time of this solstice may be calculated using the data in the table in the *Xin fa li shu* (hereafter abbreviated as *XFLS*) titled *Li yuan hou er bai heng nian biao* 曆元後二百恆年表 'Table for the two hundred successive years after the system origin'.[88] We use the figures given under the year Kangxi 8, 1669-70 己酉 *jiyou*.46, since this is the 'Root Year' *gen nian* 根年 for which the solstice of late 1668 provides the starting point of calendrical calculations. The two numerical quantities given under that root year, which serve to fix the 1668 winter solstice, are:

The 'solar mean motion root number' *ri ping xing zhi gen shu* 日平行之根數: 0;57,44,57°[89]

The 'perigee [position]' *zui gao chong* 最高衝 (lit. 'opposite the highest [point]': 6;30,44°

The instructions for calculating the solstice date and time are given a few pages before the table.[90] The significance of the figures given above, and the subsequent process of calculation, may be followed more easily using the modernised redrawing of the diagram supplied with those instructions, Appendix Figure A1.

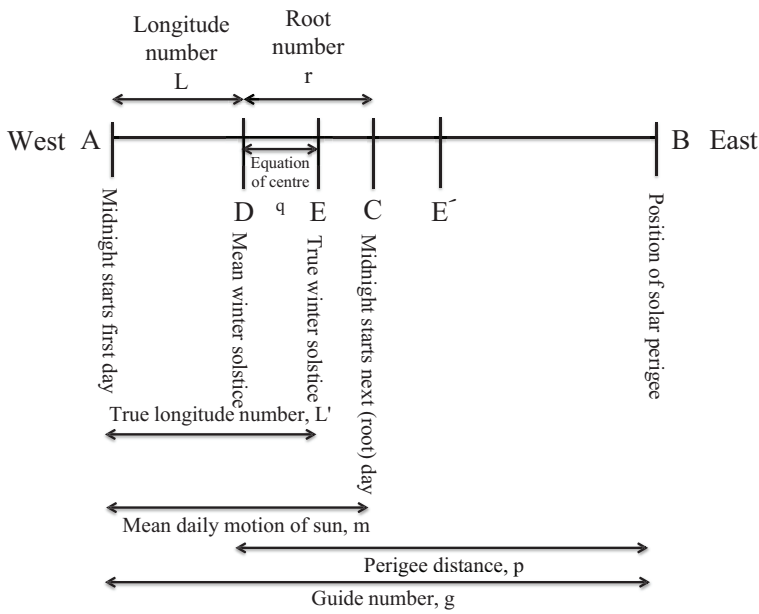

Figure A1. Diagram for 1668 mean and true winter solstice calculation.

AB is a section of the ecliptic, seen from outside the celestial sphere, so that the west to east motion of the sun is from left to right. A and C represent the positions of the mean sun at two successive midnights. The second midnight position C marks the beginning of the so-called 'root day' shown at the foot of the column of data for the year as sexagenary day *jiayin*.51, in this case equivalent to 22 December 1668. The distance between A and C, m, is the sun's mean daily motion, which in *Xin fa li shu* is taken to be 0;59,08,20°.[91] The root number, r, is the distance between the position of the mean sun at winter solstice, D, and the midnight at C. We may follow the sequence of calculations in Box A1.

Box A1. Calculation of winter solstice of December 1668.

Row number	Root year: Kangxi 8, 1669–70 己酉 *jiyou*.46			Root day: 甲寅 *jiayin*.51, 22 December 1668		
1	**Angles**	**Degrees**	**Minutes**	**Seconds**	**Thirds**	**Total thirds**
2	*XFLS* Root number, r		57	44	57	207,897
3	Solar mean motion, m		59	8	20	212,900
4	Longitude number L = m–r	0	1	23	23	5003
6	Perigee distance, p	6	30	44		1,406,640
7	Guide number g = L + p	6	32	7	23	1,411,643
9	**Tabulated values above and below g in table of equation of centre**					
10	g = 6;30	0	14	13		51,180
11	Difference			22		1320
12	g = 6;40	0	14	35		52,500
13	Proportional increment			4.66		279.6
14	Interpolated equation q	0	14	17	39	51,459.6
16	Recall longitude number, L	0	1	23	23	5003
17	True longitude number of winter solstice sun, L' = L + q	0	15	41	2	56,462.6
19	**Time**	**Hours**	**Minutes**	**Seconds**	**Thirds**	**Total thirds**
20	**Change true longitude number to time**					
21	A: Directly, using winter solstice daily motion 0;61,20°	6	8	14	3	1,325,643.652
22	B: Or using conversion table					
23	Tabulated for 15 minutes of arc	5	52	10	26	1,267,826
24	Tabulated for 41 seconds of arc		16	2	37	57,757
25	**Total, Time of true winter solstice after midnight beginning the day preceding root day 甲寅 *jiayin*.51, which is 癸丑 *guichou*.50, December 21, 1668**	**6**	**8**	**13**	**3**	**1,325,583**

By subtracting the root number from the mean motion, we obtain:

L = m – r, the 'longitude number' *jing shu* 經數, AD, given in row 4.

Adding L to the perigee distance p, we obtain the 'guide number' *yin shu* 引數, AB

g = L + p, given in row 7

This quantity plays a role equivalent to the sun's mean anomaly, which in the western tradition is measured from the apogee rather than the perigee. With it, we enter the table entitled *Ri chan jia jian cha biao* 日躔加減差表 'Table of additive and subtractive differences for the sun's orbit', to find what in the west is called the 'equation of centre'.[92] The necessary interpolation is carried out in rows 10–14, and by adding the resulting equation, g, to the longitude number we obtain the true longitude number:

$$L' = L + q, \text{ given in row 17.}$$

We now change this to hours, minutes and seconds to find the time elapsed since the midnight preceding the true winter solstice. This might be done directly, as in row 21, by dividing by the daily motion of the sun near winter solstice, which is 0;61,20°. The text however specifies that the conversion should be performed using a table, thus avoiding a sexagesimal division. The relevant table appears to be the one entitled *Xi xing bian shi biao* 細行變時表 'Table for converting small amounts of motion to time', using the section of the table relating to the winter solstice, which states it is based on a daily motion of 0;61,20°.[93] We sum the times corresponding to the minutes *fen* and seconds *miao* of arc to obtain the total time elapsed in row 25; this differs by only 1 second of time from the directly calculated result. This time interval, 6 hours 8 minutes and 13 seconds (neglecting thirds), is the time elapsed between midnight beginning the sexagenary day *guichou*.50 (21 December 1668) and the moment of the true winter solstice at 06:08:13.

The winter solstice in question is found by modern calculations (Starry Night Pro planetarium software) to have taken place at JD 2330639.46111, equivalent to 23:03:59 UT on 20 December 1668 at Greenwich. Taking the longitude of the imperial observatory at Beijing as being 116.43472° E (from Google Maps), which is equivalent to a time difference of 7 hours 45 minutes 44 seconds, the solstice would fall at 06:49:44 Beijing mean local time on 21 December, 41 minutes later than the *Xin fa li shu* prediction. Since near winter solstice an hour of time difference leads to a latitude change of less than 1 second of arc, this is not a significant time discrepancy.

Verbiest nowhere tells us the value he used for the time of the winter solstice in December 1668. However, if we use the time calculated above as our starting point, and follow the procedures set out in the *Xin fa li shu*, it is possible to calculate the time at which later instants in the solar cycle fall. One of these is the time of *li chun* 立春 'Establishment of Spring, which in Jesuit astronomical practice was defined as the moment when the sun was 45° of celestial longitude, measured along the ecliptic, past its

winter solstice position. Performing this calculation using the winter solstice timing found above predicts that this instant should fall at 09:38 on 3 February 1669 (Kangxi 8/1/3): this is precisely the moment stated by Verbiest himself in his comparison of his own values with those found by his rival Wu Mingxuan 吳明烜: see *CYJL*, p. 14a, where it is stated as *si chu er ke ba fen* 巳初二刻八分 'two marks [each of 15 min] and 8 minutes after the start of the period *si* [09:00-11:00]', thus 09:38. The exact correspondence found here suggests strongly that we have calculated the time of the preceding winter solstice as did Verbiest.[94]

Appendix B: Full shadow calculations using Xin fa li shu

In the main text, the calculations of Beijing noon solar zenith distance and altitude for 27 December 1668 were set out in Box 1, and the method for calculating the corresponding shadow length was explained in the text that followed. In Box A2, we now set out the full calculations for noon shadow lengths for all 3 days 27–29 December, following the same principles.

Box A2. *Xin fa li shu* shadow calculations for December 1668.

Row		**Degrees**	**Minutes**	**Seconds**	**Total seconds of arc**
1	**Winter solstice daily motion of sun near perigee, m**	1	1	20	3680
2	**Altitude of celestial pole at Beijing as stated by Verbiest, P**	39	55		143,700
3		**Hours**	**Minutes**	**Seconds**	**Total seconds of time**
4	**Time from Beijing midnight beginning 21 December 1668 to moment of true winter solstice, S (see calculation in Appendix A)**	6	8	13	22,093
5	**Time from winter solstice to noon on 21 December, T = 12 hours – S**	5	51	47	21,107

(Continued)

Box A2. (Continued)

6		**Degrees**	**Minutes**	**Seconds**	**Total seconds of arc**
7	**Motion of sun from winter solstice to noon on 21 December, N = m × T / (24 hours)**	0	14	59	899.0018519
8	**Motion of sun from winter solstice** to noon on 27 December, N + 6 m	6	22	59	22,979.00185
9	To noon on 28 December, N + 7 m	7	24	19	26,659.00185
10	To noon on 29 December, N + 8 m	8	25	39	30,339.00185
11	**South declination, D, of solar centre at noon, corresponding to sun's motion**	**Degrees**	**Minutes**	**Seconds**	**Total seconds of arc**
12	27 December	23	22	13	84,133.34824
13	28 December	23	19	0	83,940.32323
14	29 December	23	15	20	83,719.52988
15	**Add polar altitude P to find zenith distance of solar centre, Z = D + P**	**Degrees**	**Minutes**	**Seconds**	**Total seconds of arc**
16	27 December	63	17	13	227,833.3482
17	28 December	63	14	0	227,640.3232
18	29 December	63	10	20	227,419.5299
19	**Altitude of solar centre, A = 90° – Z**	**Degrees**	**Minutes**	**Seconds**	**Total seconds of arc**
20	27 December	26	42	47	96,166.65176
21	28 December	26	45	60	96,359.67677
22	29 December	26	49	40	96,580.47012

(Continued)

Box A2. (Continued)

23	**Refraction from A interpolated in *XFLS* table, c**	**Degrees**	**Minutes**	**Seconds**	**Total seconds of arc**
24	27 December	0	2	4	124.3056177
25	28 December	0	2	4	123.5013468
26	29 December	0	2	3	122.5813745
27	**Semidiameter of sun, *r***	0	15	30	930
28	**Apparent zenith distance of sun's upper limb, Z' = Z – r – c; parallax set at zero**	**Degrees**	**Minutes**	**Seconds**	**Total seconds of arc**
29	27 December	62	59	39	226,779.0426
30	28 December	62	56	27	226,586.8219
31	29 December	62	52	47	226,366.9485
32		**Verbiest's gnomon height H, *chi***	**Tangent of apparent zenith distance of upper limb, tan (Z')**	**Predicted umbral shadow length, U = H × tan (Z'), *chi***	**Verbiest's stated shadow lengths, *chi***
33	27 December	8.49	1.96212	16.66	16.66
34	28 December	2.2	1.95761	4.307	4.345
35	29 December	8.055	1.95247	15.73	15.83

Appendix C: Finding shadow lengths using Argoli's tables

By using his copy of Argoli's ephemerides, which give values of the longitudes of the sun, moon and planets at Rome noon for every day of the year, Verbiest might have been able to skip a number of the stages of calculation outlined earlier in this article, or at least provide himself with a check on the longitudes calculated for the 3 days of the shadow trial using the methods of the *Xin fa li shu*. As we have seen, he made pen strokes by the sides of the dates of the first two dates of the trial in his copy of Argoli. It is therefore interesting to look at this possibility in more detail.

First, however, we need to ask how Verbiest could have adapted calculations made for the longitude of Rome for use in Beijing. Fortunately, Verbiest himself has left us

handwritten notes in his copy of Argoli explaining exactly how he did this. A scribbled note in Verbiest's handwriting is found at the bottom of a page from Argoli's ephemeris for April 1670. We are grateful to Noel Golvers, who produced the transcription of which we give here the relevant parts, and to which he has kindly allowed us to suggest some small modifications:[95]

> Die 19 hora 6.54 post merid[iem] fit ☌ [concursus] ☽ [lunae] cum ☉ [sole] [. . .] (facta equatione meridiani) ☌ [concursus] ☽ [lunae] cum ☉ [sole] fit die 19 horâ 13.36 ./. hora 1ma [= prima] 36 post medi[um] noct[is] more Sinico [. . .]

We may translate, expanding the abbreviations and symbols, as follows

> 'On day 19 [of April 1670] at 06:54 after noon there is a conjunction of the Moon with the Sun [. . .] (after having made the correction of the meridian) the conjunction of the moon with the sun happens on the day 19 [of April], at 13:36 [after noon], i.e. at 01:36 after midnight [i.e. on day 20 of April], according to the Chinese way [. . .].

The time shift from Rome to Beijing is therefore 13:36 – 6:54 = 6 hours 42 minutes.

Such a calculation is likely to have been made as a check when Verbiest was engaged in preparing the calendar for Kangxi 9, in which 20 April 1670 is the first day of the third lunar month, on which the conjunction of the sun and moon should fall. The time shift implied above would therefore represent the value he used during 1669, when he would have had to begin work on this task. The moment given for this conjunction in the official People's Calendar for Kangxi 9 is *chou zheng chu ke er fen* 丑正初刻二分 'two elapsed minutes after the start of the first mark of the second half of the 2-hour period *chou* [01:00-03:00]', i.e. 02:02.[96] The fact that this differs from the value found using Argoli by only 26 minutes must have reassured Verbiest that his calculation using the *Xin fa li shu* was correctly performed. Another (undated) note in Verbiest's handwriting is found scribbled on the front papers of the third volume of his copy of Argoli (1648), and implies a time difference of 6 hours 44 minutes – which a neatly written summary added below by the Jesuit mathematician and astronomer Antoine Thomas (1644–1709) changes to 6 hours 45 minutes. Thomas joined Verbiest as his assistant in 1685, and played an important role as a mathematical specialist after the latter's death in 1688.[97] Such small changes do not affect the predicted shadow lengths within the precision used by Verbiest. A modern estimate based on the longitude difference between Rome and Beijing gives a time shift of 6 hours 56 minutes; again, changing to this value would have a negligible effect on shadow predictions.

Box A3 shows the steps by which Argoli's Rome noon values for solar longitude may be used to calculate the Beijing noon shadow lengths needed by Verbiest.

Box A3. Shadow calculations using Argoli's ephemeris.

Row		**Degrees**	**Minutes**	**Seconds**	**Total seconds of arc**
1	Altitude of celestial pole at Beijing (stated by Verbiest), P	39	55		143,700
2		**Hours**	**Minutes**		**As whole hours**
3	Time from Beijing noon to Rome noon, from notes by Verbiest in Argoli 1648	6	42		6.7
4	**Argoli Rome 1648 vol 2 p. 856, noon positions of sun in Capricorn, equivalent to longitude distance from winter solstice**	**Degrees**	**Minutes**	**Seconds**	**Total seconds of arc**
5	26 December 1668	5	36	33	20,193
6	27 December 1668	6	37	51	23,871
7	28 December 1668	7	39	9	27,549
8	29 December 1668	8	40	27	31,227
9	**Shifted back by 6 hours 42 minutes worth of daily motion to give positions of sun at preceding Beijing noon**	**Degrees**	**Minutes**	**Seconds**	**Total seconds of arc**
10	27 December	6	20	44	22,844.225
11	28 December	7	22	2	26,522.225
12	29 December	8	23	20	30,200.225
13	**From interpolation in table, south declination, D, of solar centre at noon, corresponding to sun's motion**	**Degrees**	**Minutes**	**Seconds**	**Total seconds of arc**
14	27 December	23	21	58	84,118
15	28 December	23	18	54	83,934
16	29 December	23	15	27	83,727

(Continued)

Box A3. (Continued)

17	**Add polar altitude P to find zenith distance of solar centre, Z = D + P**	**Degrees**	**Minutes**	**Seconds**	**Total seconds of arc**
18	27 December	63	16	58	227,818
19	28 December	63	13	54	227,634
20	29 December	63	10	27	227,427
21	**Altitude of solar centre, A = 90° – Z**	**Degrees**	**Minutes**	**Seconds**	**Total seconds of arc**
22	27 December	26	43	2	96,182
23	28 December	26	46	6	96,366
24	29 December	26	49	33	96,573
25	**Refraction from A interpolated in *XFLS* table, c**	**Degrees**	**Minutes**	**Seconds**	**Total seconds of arc**
26	27 December	0	2	4	124.2416667
27	28 December	0	2	3	123.475
28	29 December	0	2	3	122.6125
29	Semidiameter of sun, r	0	15	30	930
30	**Apparent zenith distance of sun's upper limb, Z' = Z – r – c; parallax set at zero**	**Degrees**	**Minutes**	**Seconds**	**Total seconds of arc**
31	27 December	62	59	24	226,763.7583
32	28 December	62	56	21	226,580.525
33	29 December	62	52	54	226,374.3875
34		**Verbiest's gnomon height H, *chi***	**Tangent of apparent zenith distance of upper limb, tan (Z')**	**Predicted umbral shadow length, U = H × tan (Z'), *chi***	**Verbiest's stated shadow lengths, *chi***
35	27 December	8.49	1.96175831	16.66	16.66
36	28 December	2.2	1.95745869	4.306	4.345
37	29 December	8.055	1.95263945	15.73	15.83

Rows 1 and 3 record the value of polar altitude for Beijing and the Rome-Beijing time shift used by Verbiest. Rows 5–8 record the Rome noon positions of the sun in Capricorn given for 26–29 December 1668 in Argoli 1648 vol. 2, 856. The difference between these positions enables the mean motion during the days 26–27 December to be calculated by subtraction, and thus by linear interpolation using the time shift, the Beijing noon positions of the sun for 27, 28 and 29 December are calculated in rows 10–12. We then interpolate in the table of declinations given in Argoli (1648) vol. 1, 376–387 to find the corresponding noon declinations in rows 14–16. From this point onwards the calculation proceeds as in Box 1 and more fully in Box A3.

As is evident from Box A3, the shadow for the first day is once more predicted to be 16.66 *chi*, to the precision with which this result is stated in reports of the shadow trial, just as we found in the case of the *Xin fa li shu* calculation. The results for the second and third day are also very close to those found by that method.

Appendix D: Finding shadows using the Rudolphine tables

Of the three methods for calculating shadow lengths mentioned in the main text, perhaps the least likely to have been used by Verbiest is to have calculated Beijing noon solar altitudes using Kepler's Rudolphine tables, although we do know that a copy of these may have reached Beijing well before Verbiest arrived there, as noted in the catalogue of the Jesuits' Beitang library. Unlike Argoli's tables, Kepler's are calculated for the longitude of Uraniborg, the site of Tycho's original observatory, rather than Rome. But since the longitudes of these positions differ by only 0.19°, equivalent to less than 1 minute of time, the same time shift of 6 hours 42 minutes may be used in applying their data to Beijing. The process of calculation dictated by the use of these tables is set out in Box A4.

Box A4. Finding December 1668 shadows using Rudolphine Tables.

Row	**Gregorian calendar date**	**Julian calendar date**	**Time by which Beijing noon precedes Uraniborg or Rome noon**	**Time of Beijing noon after noon on preceding Uraniborg or Rome day**	**Complete Uraniborg or Rome days**	
1	27 December 1668	17 December	6 hours 42 minutes	17 hours 18 minutes	16	
2	28 December 1668	18 December			17	
3	29 December 1668	19 December			18	
4		**Signs**	**Degrees**	**Minutes**	**Seconds**	**Total seconds**
5	**Altitude of celestial pole at Beijing (stated by Verbiest), P**		39	55		143,700
6	**Common tabulated components of mean motion for dates in December 1668 (in leap year)**	**Signs**	**Degrees**	**Minutes**	**Seconds**	**Total seconds**
7	1600 complete	9	20	55	23	1,047,323
8	67 years	11	29	46	1	1,295,161
9	November complete	10	29	12	22	1,185,142
10	17 hours 18 minutes of bissextile day			42	37	2557
11	Total of common quantities	32	20	36	23	3,530,183
12	**Tabulated mean motion for days**	**Signs**	**Degrees**	**Minutes**	**Seconds**	**Total seconds**
13	16 days motion		15	46	13	56,773
14	17 days motion		16	45	22	60,322
15	18 days motion		17	44	30	63,870

(Continued)

Box A4. (Continued)

16	**Total motion at Beijing noon on Gregorian dates**	**Signs**	**Degrees**	**Minutes**	**Seconds**	**Total seconds**
17	27 December	9	6	22	36	994,956
18	28 December	9	7	21	45	998,505
19	29 December	9	8	20	53	1,002,053
20	**Position of apogee for December 1668**	**Signs**	**Degrees**	**Minutes**	**Seconds**	**Total seconds**
21	1600 complete	3	5	44	8	344,648
22	67 years		1	8	49	4129
23	November complete			0	56	56
24	Add to find longitude of apogee	3	6	53	53	348,833
25	**Subtract longitude of apogee from mean motion to find mean anomaly**	**Signs**	**Degrees**	**Minutes**	**Seconds**	**Total seconds**
26	27 December	5	29	28	43	646,123
27	28 December	6	0	27	52	649,672
28	29 December	6	1	27	0	653,220
29	**Find equation of centre from mean anomaly**	**Signs**	**Degrees**	**Minutes**	**Seconds**	**Total seconds**
30	27 December	0	0	1	11	71
31	28 December	0	0	1	0	60
32	29 December	0	0	3	11	191

(Continued)

Box A4. (Continued)

33	**Add equation to mean longitude to find true longitude**	**Signs**	**Degrees**	**Minutes**	**Seconds**	**Total seconds**
34	27 December	9	6	23	47	995,027
35	28 December	9	7	22	45	998,565
36	29 December	9	8	24	4	1,002,244
37	**From interpolation in table, south declination, D, of solar centre at noon, from true longitude**		**Degrees**	**Minutes**	**Seconds**	**Total seconds**
38	27 December		23	22	17	84,137
39	28 December		23	19	5	83,945
40	29 December		23	15	26	83,726
41	**Add polar altitude P to find zenith distance of solar centre, Z = D + P**		**Degrees**	**Minutes**	**Seconds**	**Total seconds**
42	27 December		63	17	17	227,837
43	28 December		63	14	5	227,645
44	29 December		63	10	26	227,426
45	**Altitude of solar centre, A = 90° – Z**		**Degrees**	**Minutes**	**Seconds**	**Total seconds**
46	27 December		26	42	43	96,163
47	28 December		26	45	55	96,355
48	29 December		26	49	34	96,574

(Continued)

Box A4. (Continued)

49	**Tabulated correction for refraction corresponding to altitude, c**		**Degrees**	**Minutes**	**Seconds**	**Total seconds**
50	27 December			2	4	124.3208333
51	28 December			2	3	123.5208333
52	29 December			2	2	122.6083333
53			**Degrees**	**Minutes**	**Seconds**	**Total seconds**
54	**Tabulated semidiameter of sun near perigee, r**			15	30	930
55	**Apparent zenith distance of sun's upper limb, Z' = Z – r – c parallax set at zero**		**Degrees**	**Minutes**	**Seconds**	**Total seconds**
56	27 December		62	59	43	226,782.6792
57	28 December		62	56	31	226,591.4792
58	29 December		62	52	53	226,373.3917
59	**Calculating length of shadow of given gnomon, U**		**Verbiest's gnomon height H, *chi***	**Tangent of apparent zenith distance of upper limb, tan (Z')**	**Predicted umbral shadow length, U = H × tan (Z') *chi***	**Verbiest's stated shadow lengths, *chi***
60	27 December		8.49	1.962203145	16.66	16.66
61	28 December		2.2	1.957715309	4.307	4.345
62	29 December		8.055	1.952616215	15.73	15.83

Rows 1–3 illustrate the fact that Kepler's tables are based throughout on the Julian rather than Gregorian calendar, so that 27 December 1668 (Gregorian) is represented by 17 December (Julian).[98] Rows 6–10 list the common components of mean motion for the days of the shadow trial, including the component contributed by the extra day of February because 1668 is a bissextile ('leap') year. However, to take account of Verbiest's 6 hours 42 minutes time shift, only 17 hours 18 minutes of this day's motion is added. We then add on the motion for 16, 17 and 18 days to find the Beijing total noon mean motions for the days of the shadow trial, given in rows 17–18. Next in 20–24 we find the total of the components of the apogee longitude for December 1668, and hence the mean anomaly and from that the equation of centre for each day in rows 26–28 and 30–32.[99] From this we find the true longitudes in rows 34–36, from which the declinations may be found from Kepler's *Tabula Ascensionum Rectarum, Declinationum Eclipticae Punctorum* (Tables part 1, folio 24–5). The rest of the calculation proceeds as in other cases. Again we see the same result of 16.66 *chi* for the shadow of 27 December, and calculated values very close to those found using the *Xin fa li shu* and Argoli (but differing from the stated predictions) for the next 2 days.